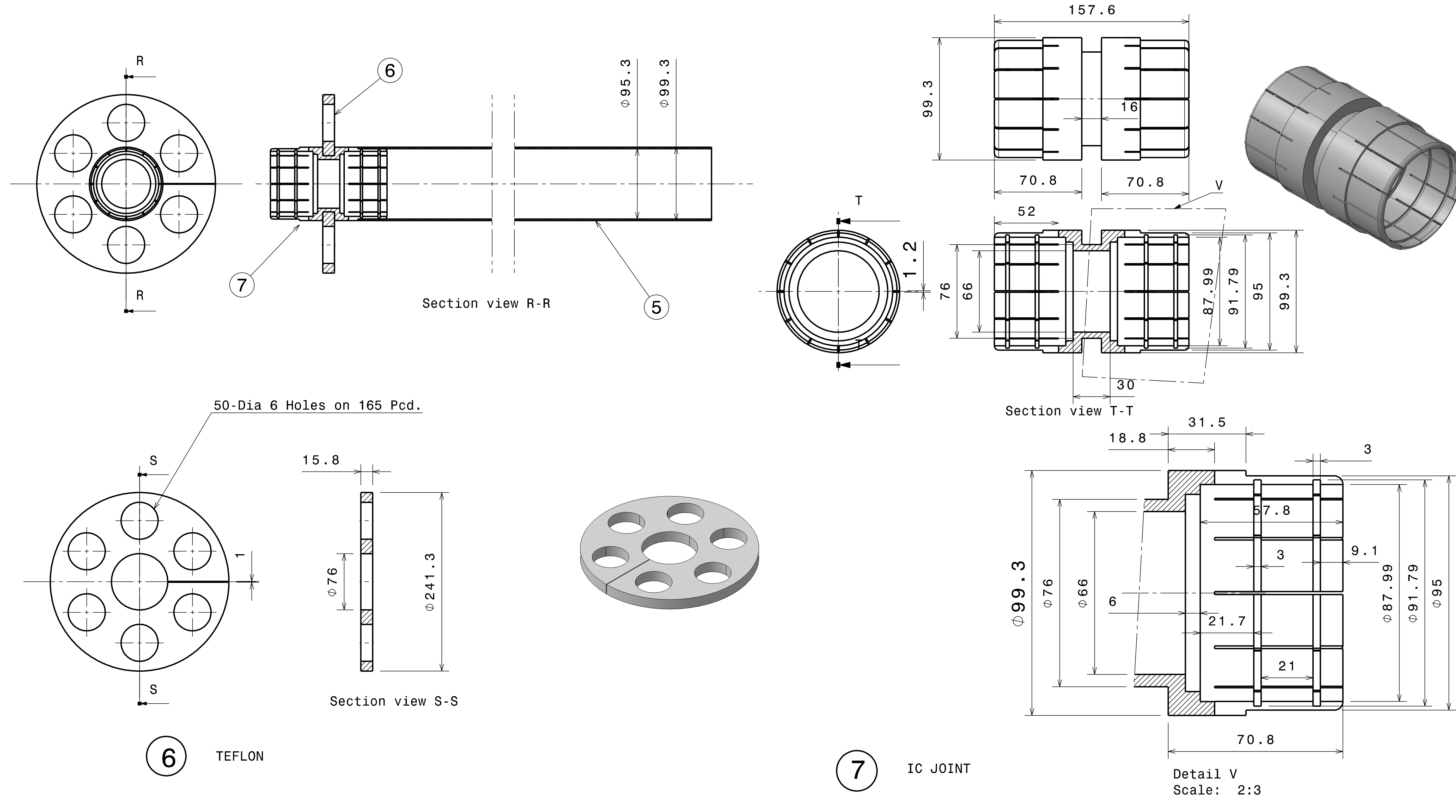

DRG.NO	▽ 8-25	▽▽ 1.6-8	▽▽▽ 0.025-1.6	▽▽▽▽ < 0.025
CO-ORDINATED BY				

MACHINING DEVIATIONS FOR NON-TOLERANCED DIMENSIONS

LENGTH IN mm OF SHORTER SIDE OF ANGLES				LENGTH OR DIA	UPTO 6	6-30	30-120	120-315
UPTO 10	10-50	50-120	OVER 120-400		±0.1	±0.2	±0.3	±0.5
±1°	±0°-30'	±0°-20'	±0°-10'					

REVISION COLUMN

REV	ZONE	DESCRIPTION	DATE	REMARKS	APPROVED BY

ASS'Y GROUP:		SIZE A3
ALL DIMENSIONS ARE IN `mm' UNLESS OTHERWISE STATED		
SCALE	NTS	DATE
DRAWN	KRR	20/07/16
DESIGNED	KKM/DRI	
APPROVED		

INSTITUTE FOR PLASMA RESEARCH
BHAT, GANDHINAGAR-382 428.

THIRD ANGLE PROJECTION

TITLE
9-3/16" CO-OXIAL TRANSMISSION
LINE SECTION DETAILS

REF DRG NO:

REV 00

DRG.NO

SHEET 5 OF 7