ANNEXURE - 1

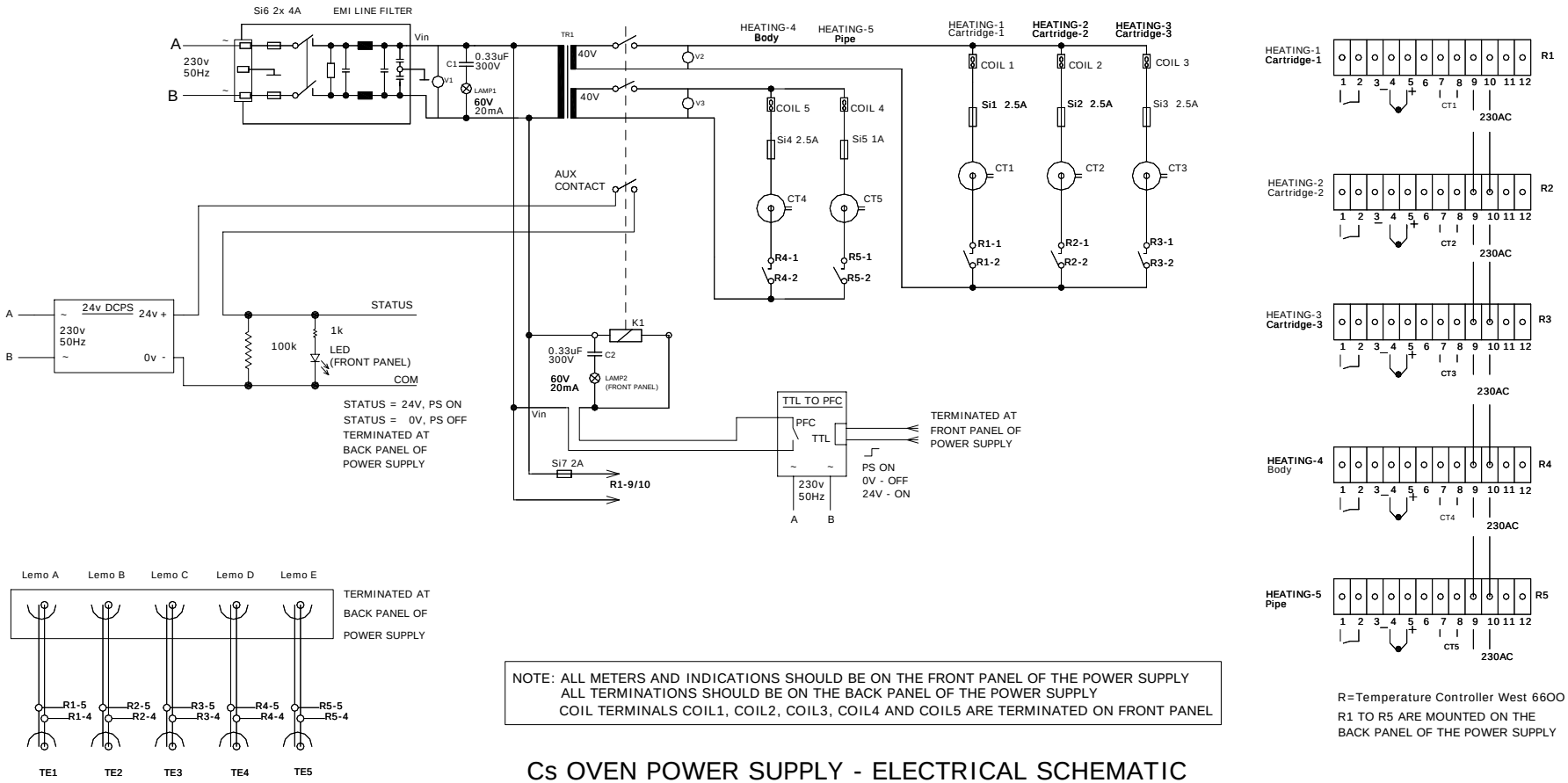

NOTE: ALL METERS AND INDICATIONS SHOULD BE ON THE FRONT PANEL OF THE POWER SUPPLY
ALL TERMINATIONS SHOULD BE ON THE BACK PANEL OF THE POWER SUPPLY
COIL TERMINALS COIL1, COIL2, COIL3, COIL4 AND COIL5 ARE TERMINATED ON FRONT PANEL

R=Temperature Controller West 66OO

R1 TO R5 ARE MOUNTED ON THE BACK PANEL OF THE POWER SUPPLY

Cs OVEN POWER SUPPLY - ELECTRICAL SCHEMATIC