# High Voltage Power Supplies

# HCH 15 000 – 300 000 MOD

Serial no. 19005-01-01

**certified according to**
**ISO 9001 : 2008**

# Operating Instructions

**This instruction is only dedicated to electrical experts and people with a suitable technical education, which are familiar with electrical risks and can keep the risk for themselves and other people as low as possible.**
**For the operation of this unit only a.m. persons are admitted.**

**JULY 2015**

## Consignes de securité (F)

***Ces consignes sont essentiellement destinées aux professionnels de l'électricité et aux personnes ayant un niveau technique suffisant, connaissant les risques électriques et capables de maintenir ces risques pour eux-mêmes et d'autres aussi bas que possible. Seules les personnes ci-dessus indiquées sont autorisée à manipuler cette alimentation.***

***Les alimentations peuvent fournir selon le modèle, de très hautes tensions et/ou de très hautes puissances.***
*S'assurer avant la mise en fonctionnement que rien ni personne ne peut être mis en danger par cette tension.*

***Avant la mise en fonctionnement**, assurez-vous d'avoir lu et compris le «manuel de mise en fonctionnement». Il est essentiel de suivre tous les conseils et avertissements qu'il contient. Dans le cas du non-respect de ces instructions, vous contrevenez aux règlements de sécurité établis pour le bon fonctionnement de ce type de matériel. En conséquence, FuG refusera la responsabibilité pour toutes conséquences découlant de ce non-respect des consignes de sécurité.*

***Tension secteur***
*Vérifiez la compatibilité de la tension secteur avec la tension d'entrée et la fréquence de votre alimentation indiquées sur l'étiquette.*

***Sortie***
***Les raccordements de sortie dépendent de la tension et de la puissance soit par prise ou par bornes. Assurez-vous que les raccordements tension et puissance sont compatibles. Pour les hautes tensions, n'utilisez que les connecteurs fournis.***

***Raccordement à la terre***
*L'appareil est fourni avec une protection terre de type allemand classe 1. L'appareil doit être raccordé au secteur par le biais d'un cable sans fusible avec fil de terre. L'écrou de terre doit impértivement être relié à la charge de manière à garantir l'équipotentiel entre la charge et le secteur.*

***Environnement de fonctionnement***
*Les appareils ne peuvent être mis en fonctionnement que dans un environnement propre et sec. Assurez-vous qu'aucun object ni liquide ne s'infiltrent dans le châssis par les lamelles de ventilation. Compte tenu des risques d'étincelles, l'apareil ne doit pas être utilisé à proximité de gaz ou de fumées inflammables.*

***Refroidissement***
*Les appareils sont refroidis par air, soit par convection, soit par ventilation forcée. C'est pourqui, assurez-vous qu'un débit d'air suffisant est disponible (prêter une attention toute particulière à section 2.1).*

***Ouverture de l'appareil***
*L'appareil peut être ouvert par le personnel utilisateur dans le seul but de manipuler les interrupteurs, conformément aux consignes de fonctionnement (par ex: interupteur IEEE 488 interface situé à l'intérieur du châssis pour certains modèles).*
***Avant l'ouverture, assurez-vous que l'appareil est débranché du secteur!***

***ATTENTION!***
***L'appareil contient des condensateurs qui ne se déchargent que très lentement (temps standard: 5 min). Dans le pire des cas, ils ne se déchargent pas du tout.***
*N'utilisez que des outils isolés. L'entretien et la réparation ne doivent être réalisés que par un personnel qualifié, conscient des dangers inhérents à de tels équipements.*

***Symboles***

***Se conformer strictement aux instructions soit avant de modifier les interupteurs, soit avant de raccorder les prises signalées par ce symbole.***

***Symbole pour sorties Haute Tension.***

***Symbole pour masse châssis, potentiel de sécurité de terre***

## Prescrizioni di sicurezza (I)

***Le presenti istruzioni sono rivolte esclusivamente a personale specializzato ed istruito tecnicamente che sia consapevole dei pericoli ed eviti danni a se stesso e ad altri. Per l'uso dell'alimentatore sono ammesse solo tali persone.***

***Gli alimentatori, a seconda del tipo, possono fornire tensioni molto elevate e/oppure potenze molto elevate!***

***Prima della messa in funzione***
*occorre accertare che niente e nessuno subisca danni di queste tensioni.*

***Prima della messa in servizio** leggete assolutamente tutte le istruzioni d'uso! Osservate tutte le indicazioni e tutti gli ammonimenti ivi contenute. La mancata osservazione delle istruzioni trasgredisce le norme di sicurezza nell'uso degli apparecchi. Per le consequenze del mancato rispetto delle normative di sicurezza, la FuG non assume alcuna responsabilità.*

***Tensione rete***
*Controllate che tensione e frequenza indicate sulla targhetta corrispondano ai valori della rete locale.*

***Uscita***
***I collegamenti delle uscite sono, a seconda della tensione e della potenza, ad innesto o a morsetto. Realizzate collegamenti correspondenti alle tensioni ed alle potenze in gioco. Per l'alta tensione usate esclusivamente i connetori in dotazione dell'apparecchio.***

***Collegamento a terra***
*L'apparecchio é dotato di protezione (classe di protezione I). Per proteggersi da eventuali scariche elettriche, l'apparecchio deve essere collegato alla terra di protezione attraverso il cavo rete.*
*Per garantire l'equipotezialità con il carico e per la messa a terra del centro stella di un impianto occorre utilizzare il morsetto di terra.*

***Ambienti di lavoro***
*Gli apparecchi vanno usati solo in ambienti puliti ed asciutti. Accertarsi che attraverso le aperture di ventilazione non possano entrare nella custodia oggetti o liquidi.*
*A causa del pericolo di formazione di scintille, l'apparecchio non va usato nelle vicinanze di gas o vapori infiammabili.*

***Raffreddamento***
*Il calore prodotto dall'apparecchio viene smaltito per conversione rispettivamente raffreddamento forzato. Deve essere possibile uno scambio d'aria con l'aria ambiente (Leggere attentamente la sezione 2.1.).*

***Apertura dell'apparecchio***
*L'apparecchio può essere aperto solo dal personale addetto per effettuare commutazioni previste dalle istruzioni d'uso (p.es. il cambio indirizzo IEEE 488-BUS in certi apparecchi é all'interno).*
***Prima dell'apertura occore isolare l'apparecchio dalla rete!***

***ATTENZIONE!***
***Nell'apparecchio si trovano condensatori che si scaricano solo lentamente (tempo di scarica tipico 5 min. oppure che in caso di guasto non si scaricano nemmeno).***
*Usate solo attrezzi isolati.*
*Lavori di manutenzione e riparazione vanno eseguiti solo da personale specializzato*

***Simboli***

***Leggete e rispettate assolutamente le istruzioni d'uso prima di manovrare o collegare gli interruttori e le boccole contrassegnati con questo simbolo.***

***Simbolo per uscite ad alta tensione.***

***Simbolo per la terra della custodia e potenziale della terra di protezione.***

## Indicaciónes de seguridad (E)

***Las instrucciónes de empleo las dirigen exclusivamente personal cualificado y tambien personas con formación técnica que estan conscientes de los riesgos y pueden evitar el pelígro para si mismo y para otras personas. El manejo del equipo sólo lo pueden hacer las personas antes mencionados.***

***Estos equipos suministran dependiendo del tipo de aparato muy alta tension y/o muy alta potencia.** Antes de poner en servicio el equipo de suministro corriente **convensace que nada ni nadie está puesto en peligro.***

***Antes de poner el equipo en servicio.** Lea usted todas las instrucciónes de empleo! Observe todas las indicaciónes y advertencias. La inobservancia de las instrucciónes de empleo viola las prescripciónes de seguridad durante la operación de los aparatos. F.u.G. no es responsable de las consecuencias que resultan de la inobservancia de las prescripciónes de seguridad.*

***Tensión de alimentación.***

*Compruebe usted que el aparato cumple las normas de Voltio y hertzio de la región donde usted lo va a utilizar. Para ésto mire la placa indicadora de tipo.*

***Salida de tensión.***
***Sí el equipo de suministro corriente tiene conexiónes a presión o conexiónes de enchufe depende de la tensión o de la potencia.***

***¡conexiónes a presión sólo hay a alta potencias!***

***¡Sólo escoga usted las conexiónes que son apropiadas para las tensiónes y las potencias!***

***Para alta tensión sólo se usan los enchufes que nosotros les proveemos.***

***Puesta a tierra.***
*El equipo de suministro corriente va equipado con una conexión a tierra. (clasificación de protección uno). Además protección contra el peligro de choques electricos; el aparato tiene que conectarse con un cable de alimentación de red y con un conductor de puesta a tierra. Para la conexión equipotencial con el absorbedor y para la conexión a tierra por punto neutro use usted el terminal de tierra.*

***Ubicación del aparato.***
*Ubique los equipos sólo en locales limpios y secos. Evite usted que no halla líquidos u objetos que puedan llegar a través de las rejillas de ventilación en la caja. En razón de la posible formación de chispas no accione usted el equipo cerca de gases o vapores inflamables.*

***Refrigeración***
*El calor perdido por el aparato es evacuado por convección o ventilación forzada. El intercambio del aire se debe hacer con el aire del medio ambiente.*

***"Abrir el equipo"***
*El personal de servicio sólo puede abrir el equipo para conmutar interruptores internos que estan descritos en las instrucciónes de empleo ( por ejemplo: el conmutador de dirección "IEEE 488 bus" esta colocado en el interior del aparato)*
*!Antes de abrirlo desconecte usted el equipo de la red c.a.!*

***¡¡Cuidado!! ¡¡Atención!!***
***En el aparato se encuentran capacitores que se descargan despacio (normalmente en cinco minutos). En caso de un error es posible que los capacitores no se descargen.***
*Solamente use herramientas aislantes. Sólo personal técnico pueden ejecutar trabajos de mantenimiento o de reparación.*

***Símbolos***

***Antes de accionar los interruptores o cablear zócalos de conexión observe todas las instrucciónes de empleo.***

***Salida de alta tensión***

***Masa de caja conectada con conductor de puesta a tierra.***

## Veiligheidsvoorschriften (NL)

***Deze instructies zijn enkel bestemd voor electrische experten en personen met een aangepaste technische opleiding, die vertrouwd zijn met de electrische risico's en die de risico's voor zichzelf en voor anderen tot een minimum kunnen beperken.***

***De voedingen leveren, afhankelijk van het type, zeer hoge spanningen en/of een zeer hoog vermogen! Verzeker u ervan voor de inbedrijfstelling, dat niets of niemand door deze spanning in gevaar kan gebracht worden.***

***Voor de inbedrijfstelling***
*Lees eerst de volledige gebruiksaanwijzing! Hou rekening met alle aanwijzingen en waarschuwingen die erin vermeld staan! Indien u de vermelde gebruiksaanwijzingen niet respecteert, bent u in overtreding met de veiligheids-voorschriften voor dit soort toestellen. F.u.G. aanvaardt geen enkele verantwoordelijkheid voor gevolgen ontstaan door het niet naleven van deze veiligheidsinstructies.*

***Netspanning***
*Controleer of de ingangsspanning en frequentie die op het etiket van deze voeding aangegeven zijn, corresponderen met de beschikbare netspanning.*

***Uitgang***
***De aansluitingen aan de uitgang zijn, afhankelijk van spanning en vermogen, stekkers of klemmen. Zorg ervoor dat u de juiste verbindingen gebruikt voor spanning en vermogen. Gebruik voor hoge spanningen enkel de meegeleverde connectors.***

***Aarding***
*Het toestel is voorzien van een veiligheidsaarding (veiligheidsklasse I in Duitsland). Als beveiliging tegen electrische schokken moet het toestel rechtstreeks met de aarding van het net verbonden worden. Om het potentiaalevenwicht tussen de uitgang en de neuter te behouden, moet de aardingsklem verbonden worden.*

***Gebruiksomgeving***
*Deze toestellen mogen enkel gebruikt worden in een propere en droge omgeving. Verzeker u ervan dat er geen objecten of vloeistoffen door de ventilatieroosters in het toestel kunnen terechtkomen. Omwille van het gevaar voor vonken, mag het toestel niet in de nabijheid van ontvlambare gassen of dampen gebruikt worden.*

***Koeling***
*De toestellen zijn luchtgekoeld door convectie of gedwongen ventilatie. Bijgevolg moet u ervoor zorgen dat er voldoende luchtcirculatie rondom het toestel mogelijk is (vooral rekening houden met sectie 2.1).*

***Openen van het toeste***
*Het toestel mag door het bedieningspersoneel enkel geopend worden voor het omschakelen van interne schakelaars, zoals beschreven in de gebruiksaanwijzing (bv. de adresschakelaar van de IEEE 488 interface, die zich bij sommige apparaten binnenin de behuizing bevindt).*
***Controleer, voor opening van het toestel, dat het niet (niet meer) op de netspanning is aangeloten.***

***ATTENTIE***
***Het toestel bevat condensatoren, die slechts heel traag ontladen (typische ontladingstijd 5 minuten) of, in het slechtste geval, helemaal niet ontladen.***
*Gebruik dus enkel geïsoleerd gereedschap. Onderhoud en herstellingen mogen enkel uitgevoerd worden door opgeleid personeel, die op de hoogte zijn van de gevaren eigen aan deze toestellen.*

***Symbolen***

***Gelieve u strikt aan de gebruiksaanwijzingen te houden bij het verzetten van schakelaars of het verbinden van stekkers, gemerkt met dit symbool!***

***Symbool voor uitgang met hoogspanning***

***Symbool voor aarding aan behuizing***

## Sicherheitshinweise (D)

***Diese Betriebsanleitung richtet sich ausschließlich an Elektrofachkräfte und Personen mit einer geeigneten technischen Ausbildung, die sich der Gefahren bewußt sind und die Gefährdung für sich und andere möglichst gering halten können. Für die Bedienung des Netzgerätes sind nur o.g. Personen zugelassen.***

***Die Netzgeräte liefern je nach Typ sehr hohe Spannungen und / oder sehr hohe Leistungen!***
***Überzeugen Sie sich vor Inbetriebnahme davon, daß nichts und niemand durch diese Spannung gefährdet wird!***

***Vor Inbetriebnahme***
*Lesen Sie unbedingt die ganze Betriebsanleitung! Beachten Sie alle darin enthaltenen Hinweise und Warnungen. Das Nichtbefolgen dieser Betriebsanleitung verletzt die Sicherheitsbestimmungen beim Betrieb der Geräte. Für Folgen, die aus der Nichtbeachtung der Sicherheitshinweise entstehen, kann FuG keine Haftung übernehmen.*

***Netzspannung***
*Überprüfen Sie, ob die auf dem Typenschild angegebene Netzspannung und Frequenz mit Ihrer örtlichen Netzspannung übereinstimmt.*

***Ausgang***
***Die Ausgangsanschlüsse sind abhängig von Spannung und Leistung steckbar oder klemmbar. Hohe Leistungen sind nur klemmbar. Sorgen Sie für spannungs- und leistungsgerechte Verbindungen. Für Hochspannung verwenden Sie nur die mitgelieferten Stecker.***

***Erdung***
*Das Gerät ist mit einer Schutzerde ausgestattet (Schutzklasse 1). Zum Schutz gegen die Gefahr elektrischer Schläge muß das Gerät über ein Netzkabel mit Schutzleiter angeschlossen werden.*
*Zum Potentialausgleich mit dem Verbraucher und zur Sternpunkterdung einer Anlage muß der Erdungsbolzen verwendet werden.*

***Betriebsräume***
*Die Geräte dürfen nur in sauberen und trockenen Räumen betrieben werden. Stellen Sie sicher, daß durch die Lüftungsschlitze keine Gegenstände oder Flüssigkeiten in das Gehäuse gelangen können.*
*Wegen der Gefahr der Funkenbildung darf das Gerät nicht in der Nähe von brennbaren Gasen und Dämpfen betrieben werden.*

***Kühlung***
*Die im Gerät entstehende Verlustwärme wird durch Konvektion bzw. Zwangsbelüftung abgeführt. Es muß ein Luftaustausch mit der Umgebungsluft möglich sein (siehe Abschnitt 2.1.)*

***Gerät öffnen***
*Das Gerät darf vom Bedienungspersonal nur geöffnet werden, um interne Schalter umzuschalten, die in der Bedienungsanleitung beschrieben sind (z.B. Adreßschalter IEEE 488-Bus, ist bei manchen Geräten inseitig).*
***Vor dem Öffnen muß das Gerät vom Netz getrennt werden!***

***ACHTUNG!***
***Im Gerät befinden sich Kondensatoren, die sich nur langsam entladen (typische Entladezeit 5min) oder sich im Fehlerfall gar nicht entladen.***
*Benutzen Sie nur isoliertes Werkzeug.*
*Wartungs- und Reparaturarbeiten dürfen nur von geschultem Servicepersonal ausgeführt werden.*

***Symbole***

***Beachten Sie unbedingt die Betriebsanleitung, bevor Sie Schalter oder Buchsen mit diesem Kennzeichen betätigen bzw. beschalten!***

***Kennzeichen für Hochspannung führende Ausgänge***

***Kennzeichen für Gehäusemasse auf Schutzleiterpotential***

## Safety Instructions (GB)

***This instruction is dedicated only to electrical experts and people with a suitable technical education, are familar with electrical risks and can keep the risk for themselves and for others as low as possible. Only authorized personel as mentioned above should be allowed to operate teh power supplies.***

***The power supplies, depending on type, create very high voltages and / or very high power!***
***Convince yourself first, that nothing and nobody can be endangered by this voltage, before operating the unit!***

***Before operating the unit***
*Make sure that you have read and understood the operating instruction manual! Ensure that you observe all the hints and warnings contained within it.*
*In not following the operating instructions, you contravene the safety regulations for operating units of this type. FuG accepts no liability for consequences arising from the failure to follow these safety instructions.*

***Input voltage***
*Check whether the input voltage and frequency for your power supply noted on the lable corresponds with your actual input voltage.*

***Output***
***The output terminals depend on the voltage and power with plugs or clamps. Take care for adequate voltage and power connections. For high voltage use only the enclosed connectors.***

***Ground***
*The unit is provided with a safety ground (German safety class 1). For protection against electric shocks the unit must be connected to mains via a cable with non-fused earthed conductor.For electrical potential equalization to the load and to the center of the AC-net the earth stud must be used.*

***Operating enviroment***
*The units may only be operated in a clean, dry enviroment. Ensure that no objects or liquids can get into the case through the ventilation slits.*
*Because of the risc of sparcs the unit should not be operated in the vicinity of flammable gases or fumes.*

***Cooling***
*The units are air cooled by convection or forced ventilation. Therefore, ensure that an adequate air-flow is available, (pay attetion to section 2.1.)*

***Opening the unit***
*The unit may be opened by operating personnel only to operate internal switches as decribed in the operating instructions, (e.g. address switch IEEE 488 interface, which is inside the case in some types).*
***Before opening , ensure that the unit is unplugged from the mains!***

***ATTENTION!***
***The unit contains capacitors, which discharge themselves only very slowly (typical discharge time 5 min) or, in worst case, do not discharge at all.***
*For switch over use insulated tools only. Maintenance or repair of this units should only be carried out by trained service personnel who are aware of the inherent dangers of such equipments.*

***Symbols***

***Strictly follow the operating instructions before you either change switches, or connect sockets, marked with this symbol!***

***Symbol for High Voltage outputs***

***Symbol for chassis earth, potential safety earth.***

## Säkerhetsanvisningar (S)

***Denna instruktion vänder sig uteslutande till fackfolk inom elektricitet och personer med gedigen teknisk utbildning inom detta område, som är medveten om riskerna, och som kan hålla hög personsäkerhet för dem själva samt även övriga berörda personer. Användning av nätaggregaten är endast tillåten för sådana personer.***

***Nätaggreagaten kan beroende på typ leverera myckethöga spänningar och/eller mycket hög effekt. Kontrollera därför före igångsättning att inget eller ingen person kan utsättas för ska da av spänningen.***

***Före igångsättning***
*Läs igenom hela användarhandledningen. Observera alla hänvisningar och varningar som den innehåller. Att inte följa dessa och därvid bryta mot säkerhetsbestämmelserna vid användning av enheten gör att FuG inte kan lastas för något som helst ansvar.*

***Nätspänning***
*Kontrollera att nätspänning och frekvens överenstämmer med den tillgängliga och de på enhetens märkskylt angivna värdena.*

***Utgång***
***Anslutningen är beroende på spänning och effekt utförd med lämplig kontakt eller klämmskruv. Vid hög effekt levereras endast klämmskruv. Anslut med rätt typ av kabel. För högspänning använd medlevererad kontakt.***

***Jordning***
*Enheten är utförd med säkerhetsjord enligt tyska säkerhetsbestämmelser (Skyddsklass 1). För skydd mot elektrisk chock måste nätkabel vara med ansluten skyddsledare. För potentialutjämning mellan belastningen och stjärnpunktsjordning i elnätet måste jordanslutningsbulten i enheten användas.*

***Omgivningsmiljö***
*Enheten skall endast arbeta i ren och torr miljö. Användaren måste försäkra sig om att inga föremål eller vätskor kan komma in genom ventilationen.*
*På grund av risken för överslag i enheten skall denna ej användas i närheten av brännbara ämnen eller gaser.*

***Kylning***
*Enheten är normalt kyld med forcerad luft. Säkerställ att luftflöde kan ske med omgivande luftutrymme.*

***Öppning av enheten***
*Enheten skall endast öppnas av användaren i de fall då enligt användaranvisningen, omkopplare måste ställas om (endast för adress till IEEE 488-bus, som är placerade på kretskort inuti enheten).*
***Före öppning kontrollera att nätanslutningen är bortkopplad.***

***VARNING!***
***Enheten innehåller kondensatorer vilka urladdar sig själva mycket sakta (typisk urladdningstid ca 5 minuter) eller, vid fel, ej urladdas alls.***
*Använd endast isolerade verktyg. Underhåll och reparations-arbeten skall endast utföras av utbildad servicepersonal.*

***Symboler***

***Följ noggrannt användarhandledningen före ändring av omkopplare eller anslutningskontakt som är markerad med denna symbol.***

***Symbol för utgång med högspänning***

***Symbol för chassiejord på skyddsledarpotential***

## Sikkerhedsinstruktion (DK)

***Denne instruktion henvender sig kun til el eksperter og folk med en passende teknisk uddannelse, som er bevidste om farerne ved elektricitet og som kan holde risikoen for dem selv og andre så lav som muligt. Apparatet må kun betjenes af (a.m.) folk.***

***Strømforsyningen leverer afhængig af type meget høj spænding og/eller meget høj effekt! Før du starter, skal du være helt sikker på, at intet eller ingen kan komme i fare ved denne spænding.***

***Før du starter***
*Vær sikker på, at du har læst og forstået betjeningsvejled-ningen! Sikrer dig, at du har bemærket alle henvisninger og advarsler i den. Ved ikke at følge betjeningsvejlednin-gen overtrædes sikkerhetdsbestemmelserne til betjening at denne type apparat. FuG accepterer intet ansvar for konsekvenser, som kommer af, at sikkerhedinstruktionen ikke er blevet fulgt.*

***Forsyningsspænding***
*Undersøg om indgangsspændingen og frekvensen for din strømforsyning, hvilket står på mærkatet, svarer til din faktiske forsyningsspænding.*

***Udgang***
***Udgangspolerne er afhængige af spændings- og effektstikbensklemmer. Sørg for tilstrækkelige spændings- og effektforbindelser. Ved høj spænding må kun de vedlagte forbindelsesklemmer bruges.***

***Jord***
*Apparatet er udstyret med sikkerhedsjord (tysk sikkerheds-klasse 1). Til beskyttelse mod elektriske stød skal apparatet forbindes med en hovedledning via et kabel med en smeltesikret jord strømleder. Til elektrisk potentiel udligning af lasten og til midten af AC-anlægget skal jordbolten bruges.*

***Arbejdsomgivelserne***
*Apparaterne må kun anvendes i rene og tøre omgivelser. Sikrer dig, at ingen ting eller væsker kan komme ind i kassen gennem ventilationssprækkerne. På grund af gnistdannelse må apparatet ikke anvendes i nærheden af brandbare gaser eller røg.*

***Afkøling***
*Apparaterne afkøles af cirkulationsevne eller tvunget ventilation. Sikrer dig derfor, at en tilstrækkelig luftgennemstrømning er mulig (læg specielt mærke til afsnit 2.1).*

***Åbning af apparatet***
*Aparatet må kun åbnes af operationspersonalet ved omstilling af omskifteren som beskrevet i betjeningsvejledningen (fx adresseomskifter IEEE 488 grænseflade, som er inden i kassen i nogle modeller).*
***Før du åbner apparatet skal du sikre dig, at apparatet er afbrudt fra hovedledningen!***

***ADVARSEL!***
***I aparatet findes der kondensatorer, som aflader sig selv meget langsomt (typisk afladningstid er 5 min.) eller, i værste fald, slet ikke aflader sig. Benyt kun isoleret værktøj.***
*Eftersyn eller reparationer af apparatet må kun udføres af uddannet personale, som kender til faren ved sådant udstyr.*

***Symboler***

***Læs nøje betjeningsvejledningen før du enten skifter afbrydere eller forbinder fatninger, som er markeret med dette symbol.***

***Symbol for højspænging ved udgang***

***Symbol for chassis jord, potentiel sikkerhedsjord***

**Content:**


1. Safety Instructions ....3
2. General ....4
2.1 Setup Information ....5
2.2 Preparation for commissioning ....5
3. Description ....6
3.1 Power supply front view ....6
3.2 Power supply, view from the side ....7
3.3 Front panel, electronic unit ....8
3.4 Rear panel, electronic unit ....9
3.5 Front panel, POWER STAGE ....10
3.6 Fear Panel, POWER STAGE ....10
3.7 Output panel ....11
3.8 Top view oiltank ....12
3.9 Assembly ....13
3.10 Mode of operation ....13
4. Operation with local controls ....14
5. Maintenance ....15
6. Programming ....16
6.1 Digital Interface PROBUS V RS 232 ....18
7. Technical Data ....19
8. Calibration (Option) ....20
9. Certificate of Conformity ....20
10. Accessories ....20
10.1 Cable, plug ....20
11. Warranty, Repairs ....20

# 1. Safety Instructions

**The units of the series HCH deliver dangerously High Voltages! Ensure that nothing and nobody will be endangered by this High Voltage before putting the unit into operation!**

**Attention !** **The full dielectric strength of the high voltage connectors is only achieved if fully mated together.**

**Before putting into operation** Make sure that you have read and understood the operating instruction manual! Ensure that you observe all the hints and warnings contained within it. In not following the operating instructions, you contravene the safety regulations for operating units of this type. FuG accepts no liability for consequences arising from the failure to follow these safety instructions.

**Mains voltage** Check whether the input voltage for your power supply, noted on the type label, corresponds to your actual mains voltage.

**Earth** The unit is provided with a safety earth (German safety class I). For protection against electric shocks, the unit must be connected to the mains via a suitable 5-pole cable with a non-fused earth conductor.
For electrical potential equalization to the load and to the center of the AC-supply, the earth stud must be used.

**High leakage current!** Labeled by a sticker on the rear. At a high leakage current is an earth connection to the Earth stud mandatory.

**Operating environment** The units may only be operated in a clean, dry environment.
Please make sure that no objects or liquids can enter the casing through the ventilating apertures.
Because of the risk of sparks, the unit must not be operated in the vicinity of flammable gases or fumes.

**Cooling** To ensure an adequate cooling, the ambient temperature must not exceed **40°C**.
Therefore please ensure that an adequate air-flow is available and that nothing is placed either above or below the unit which may impede this air-flow.
Do not operate table top units without the mounted legs.
Do not expose the unit directly to solar radiation.
If the unit is used as a plug-in component, sufficient air-flow must be provided (1HU = 44,5 mm above and below clear).

**Opening the unit** **Before opening, ensure that the unit is disconnected from the mains!**
The unit may be opened by operating personnel only for the purpose of operating switches as described in the operating instructions, (e.g. baud rate switch of Probus V, which is inside).

**ATTENTION!** **The unit contains capacitors, which discharge only very slowly (typical discharge time 5 min) or, in worst case, do not discharge at all.**

For switch over use isolated tools only.

Maintenance or repair of this unit should only be carried out by trained service personnel who are aware of the inherent dangers of such equipment.

**Symbols**

**Adhere strictly to the operating instructions before you either change switches, or connect sockets, marked with this symbol!**

**Symbol for HIGH VOLTAGE OUTPUTS**

**Symbol for chassis earth, potential safety earth**

# 2. General

The units of the series HCH are highly-stable DC- power supplies..

**High Voltage Output** **ATTENTION! The units supply dangerously HIGH VOLTAGE!**

**Polarity** Positive

**Short-circuit Protection** All units are short-circuit proof. The maximum current can be supplied for all output voltages, even in case of a short-circuit.

**ATTENTION!** **During short-circuit or flash over, the internal filter-capacitors will be discharged very fast. The output current is only limited by internal safety resistors and can reach a value 500 times higher than the nominal value.**

**Load Types** The type of load is customer design.

**Type Number** From the type number you can see both the power class and the maximum output voltage of the unit.

Example: **HCH 15 000 – 300 000 MOD** = Power class 15kW / Nominal voltage 300kV

**Serial Number** The label on the rear of the unit, the technical manual and the circuit diagrams show the serial number.
It has the following content:

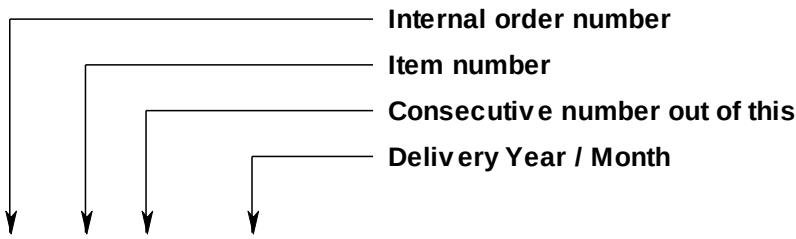


**Serial No.:** ***AAAAA-PP-NN YYYY/MM***

**IMPORTANT** **Please indicate on all further enquiries for warranty, service or spare parts orders the serial number and the model number of the unit.**

## 2.1 Setup Information

**Operating position** The units may only be operated in horizontal position.

**Class of pollution** The units are designed for the pollution class 1

**EMC** The units are built according to current standards. Valid for the signal and control lines up to 3 m length

**Transport** If the power supply is equipped with lifting appliances or handles, the weight of the unit must be shared to these points.

## 2.2 Preparation for commissioning

**Oil dryer (Top of Oil tank)** Before putting into operation do connect dryer and ventilation hoses.

**Mains Voltage** Check whether the input voltage for your power supply, noted on the type label, corresponds to your actual mains voltage.
Use only the enclosed delivered mains cable.

**Earth, Safety Conductor** The unit is provided with a safety earth (German safety class I). For protection against electric shocks, the unit must be connected to the mains via a suitable 3 or 5-pole cable with a non-fused earth conductor.
For electrical potential equalization to the load and to the center of the AC-supply, the earth stud must be used.

**High leakage current!** When this sticker is placed on the rear side of the unit or the text “High leakage current” is engraved, the unit must be grounded properly by using the appropriate grounding bolt with a cable of at least 10 mm ² cross section.

**Fuses** Internal: See type label.
External: On mains side next higher size, characteristics delay-action or if automatic cut-out is used, characteristics "C" or "K".

**Load connection** The load must be connected on the HV socket of the power supply.
For the return current connection, the screen of the HV- cable or a separate conductor can be used.
**The return current must not flow back via mains earth!**
The screen of the HV-cable always lies at earth potential.

**Use only the enclosed connector resp. the enclosed connector/ HV-cable combination.**

**Attention!** **Please obtain the limitation of isolation at units with option “Analogue programming”.**

# 3. Description

## 3.1 Power supply front view

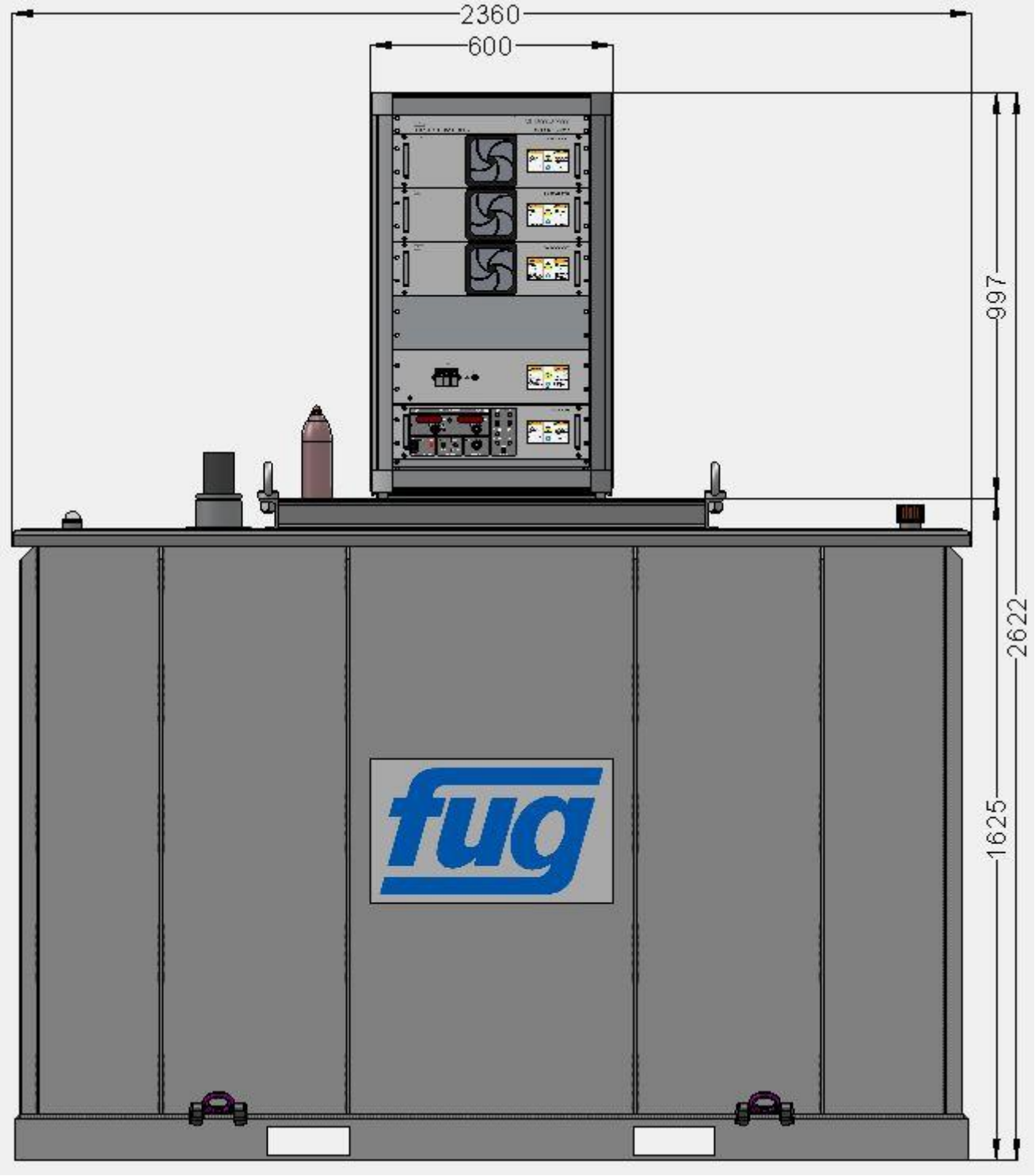

## 3.2 Power supply, view from the side

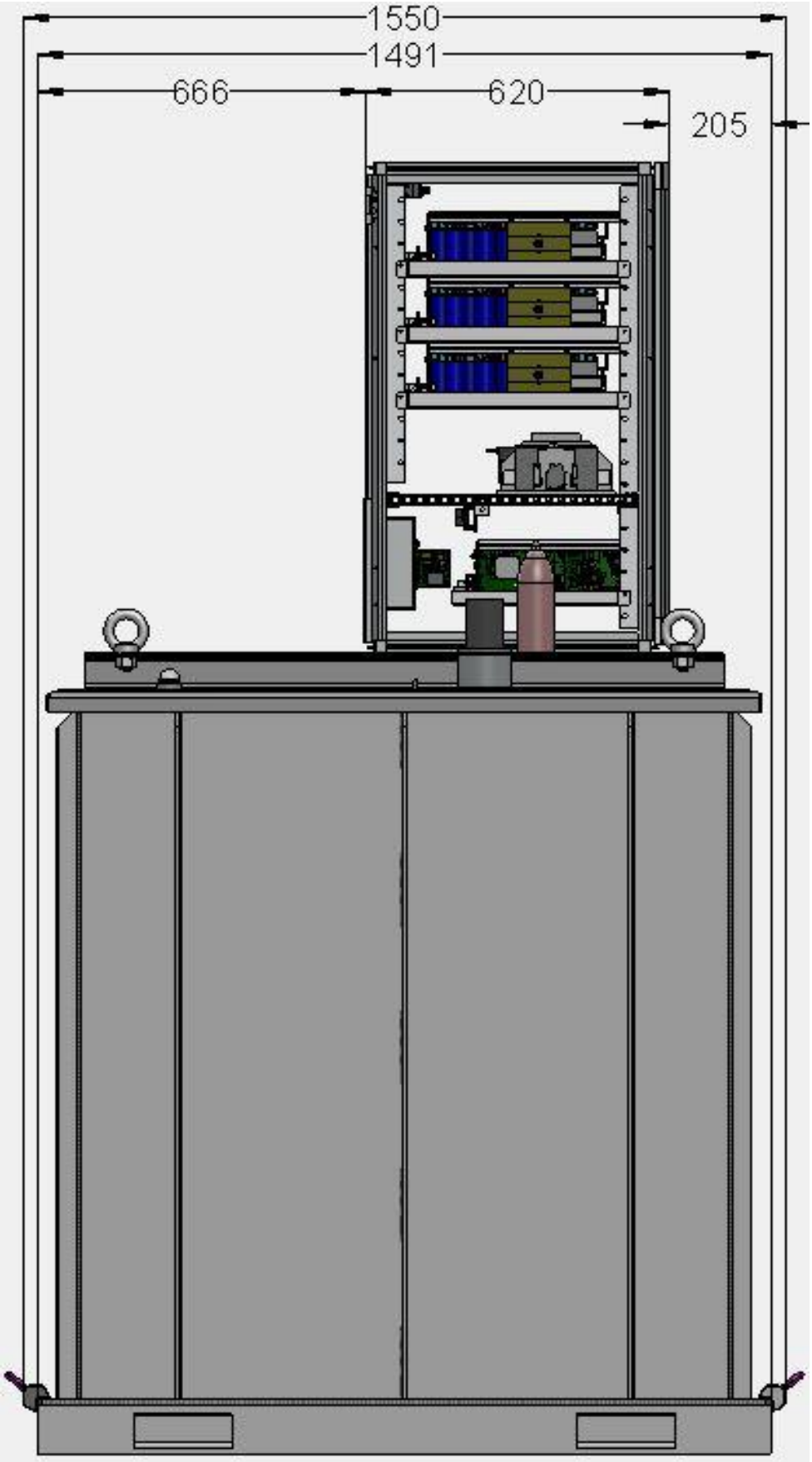

## 3.3 Front panel, electronic unit

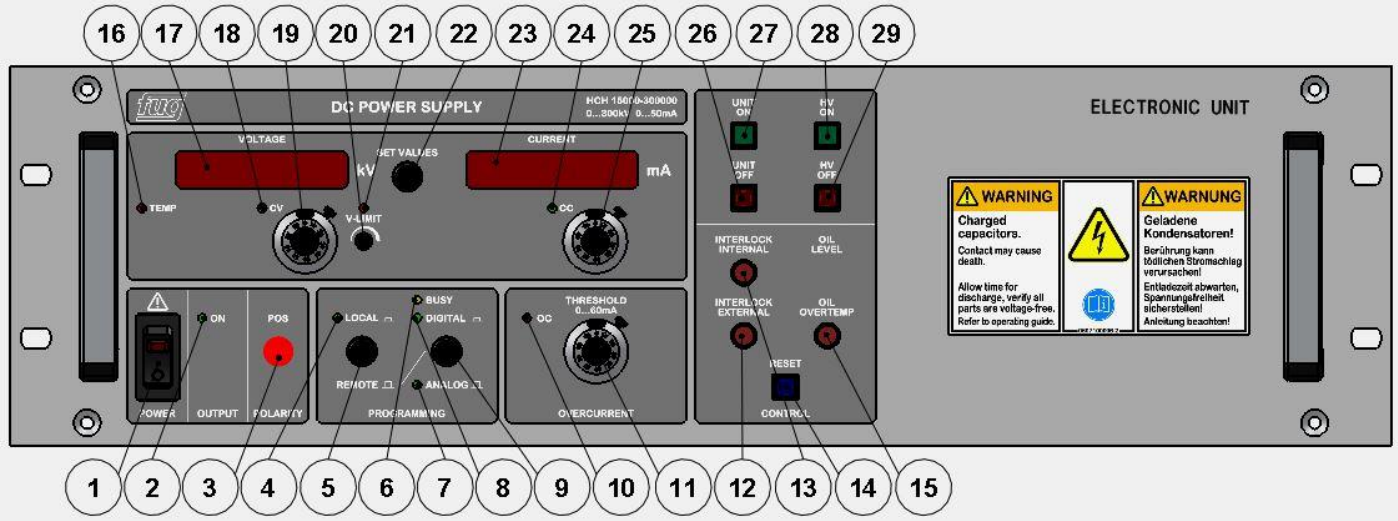


| | | | |
|---|---|---|---|
| 1 | Mains Power Switch. Provides two pole isolation from mains network | 16 | Indicates over temperature of the power amplifier (ambient temperature too high, fan failed or dusty) |
| 2 | Output release status.<br>Indicates controller and output active. | 17 | Voltage display:<br>Flashing: set value is displayed<br>Non flashing: actual value is displayed |
| 3 | Indicators for polarity (positive) | 18 | Indicates control state **C**onstant **V**oltage CV |
| 4 | Indicates the active control input LOCAL | 19 | Lockable Potentiometer for voltage set value |
| 5 | Selects control between “LOCAL” and “REMOTE” | 20 | Indicates active voltage set value limitation |
| 6 | Indicates data traffic on digital interface | 21 | Potentiometer for voltage set value limitation (adjustable only with a tool) |
| 7 | Indicates the active control input “ANALOG” | 22 | Switches display to set value |
| 8 | Indicates the active control input “DIGITAL” programming | 23 | Current display:<br>Flashing: set value is displayed<br>Non flashing: actual value is displayed |
| 9 | Selects control between “ANALOG” or “DIGITAL” programming | 24 | Indicates control state **C**onstant **C**urrent CC |
| 10 | Indicates OVER CURRENT (OC) | 25 | Lockable Potentiometer for current set value |
| 11 | Lockable Potentiometer for THRESHOLD OVER CURRENT (0 … 60mA) | 26 | Button UNIT OFF (disable main power) |
| 12 | “INTERLOCK EXTERNAL” (this LED lights up, if the external interlock loop is not closed.) | 27 | Button UNIT ON (release main power) |
| 13 | “INTERLOCK INTERNAL” (this LED lights up, if the internal interlock loop is not closed.) | 28 | Button HV ON (release HV-Output) |
| 14 | Button “RESET” (this button resets the message “INTERLOCK EXTERNAL”; “OIL OVER CURRENT”; “OIL OVER TEMPERATURE” and “INTERLOCK INTERNAL” (without “TEMP”) | 29 | Button HV OFF (disable HV-Output) |
| 15 | Indicates oil over temperature (ambient temperature too high) | | |

## 3.4 Rear panel, electronic unit

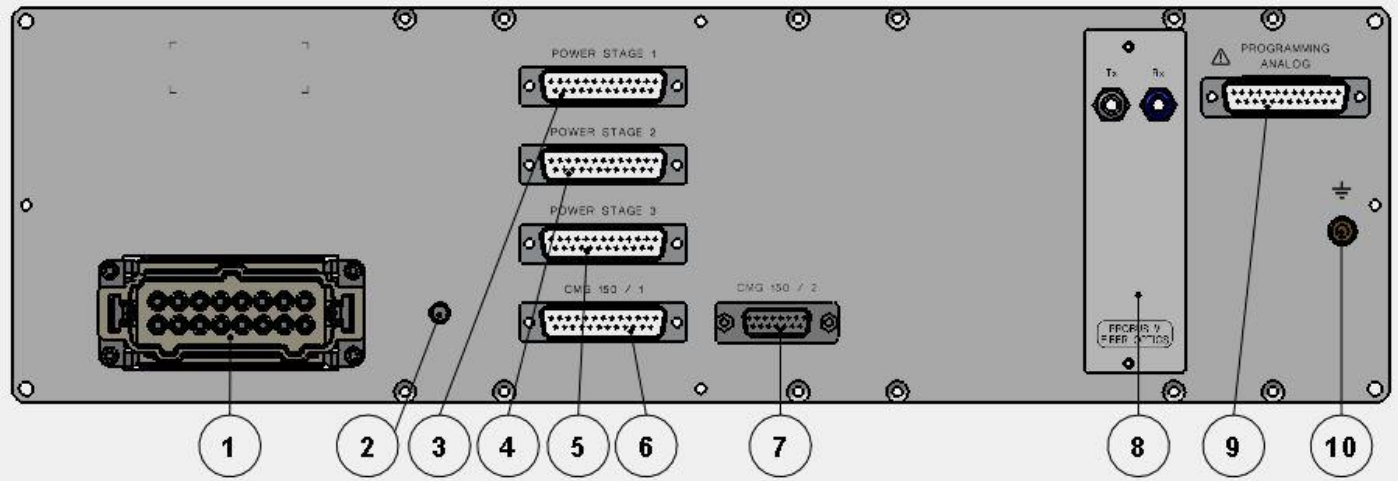


| | |
|---|---|
| 1 | main connection between the electronics unit and cabinet |
| 2 | Locking screw to avoid cable damage to the connectors POWER STAGE 1-3 and CMG 150<br>To secure insertion in normal operation with screw |
| 3 | Connection (SUB-D 25P) between the electronics unit and power unit (POWER STAGE 1) |
| 4 | Connection (SUB-D 25P) between the electronics unit and power unit (POWER STAGE 2) |
| 5 | Connection (SUB-D 25P) between the electronics unit and power unit (POWER STAGE 3) |
| 6 | Connection (SUB-D 25P) between the electronics unit and measure unit (CMG 150 / 1) |
| 7 | Connection (SUB-D 15P) between the electronics unit and measure unit (CMG 150 / 2) |
| 8 | Fiber optical link to interface |
| 9 | Connection (SUB-D 25P) analog programming |
| 10 | Earth stud |

## 3.5 Front panel, POWER STAGE

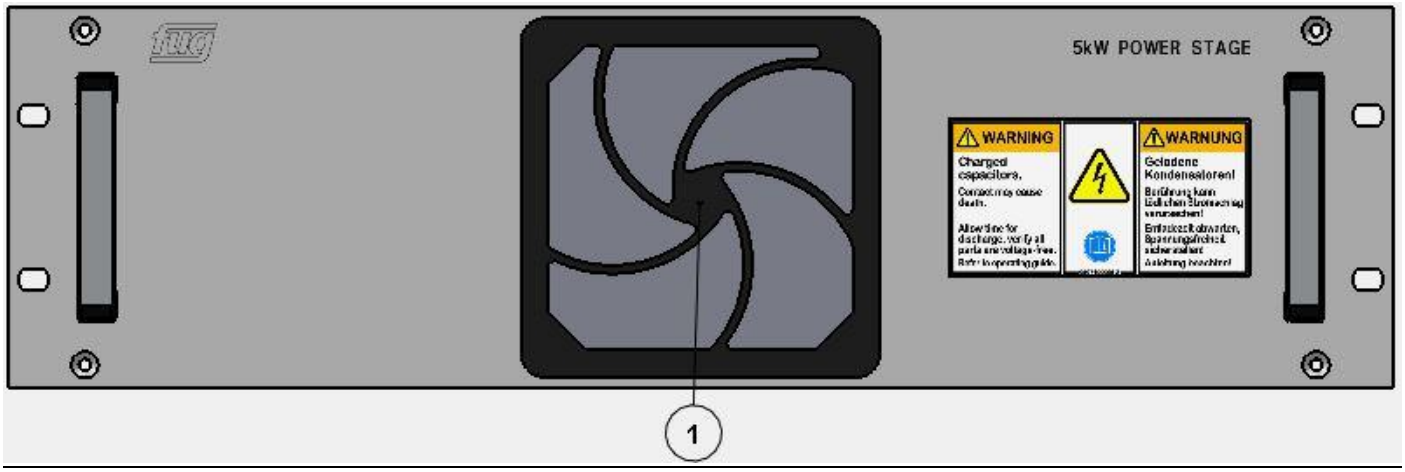


| | |
|---|---|
| 1 | Air inlet |

## 3.6 Fear Panel, POWER STAGE

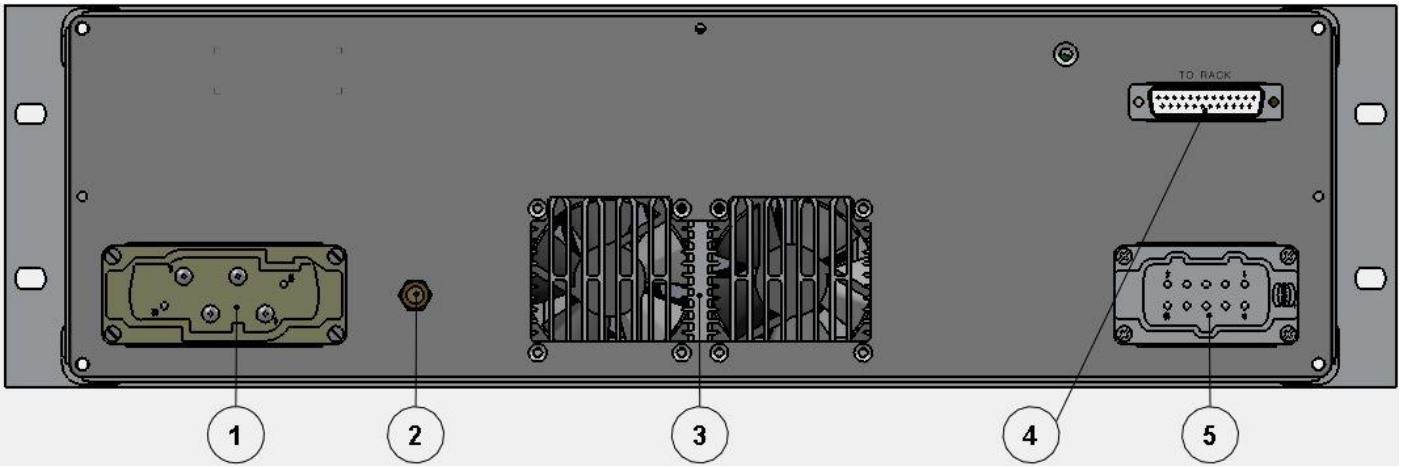


| | |
|---|---|
| 1 | Output connection (HAN4/2) between the power stage unit and the oil tank (DP 220) |
| 2 | Locking screw to avoid cable damage to the connectors POWER STAGE 1-3 and CMG 150<br>To secure insertion in normal operation with screw |
| 3 | Air outlet (heat sink power stage) |
| 4 | Control connection (SUB-D 25P) between the power stage unit and electronic unit |
| 5 | Control connection (HAN10E) between the power stage unit and cabinet |

## 3.7 Output panel

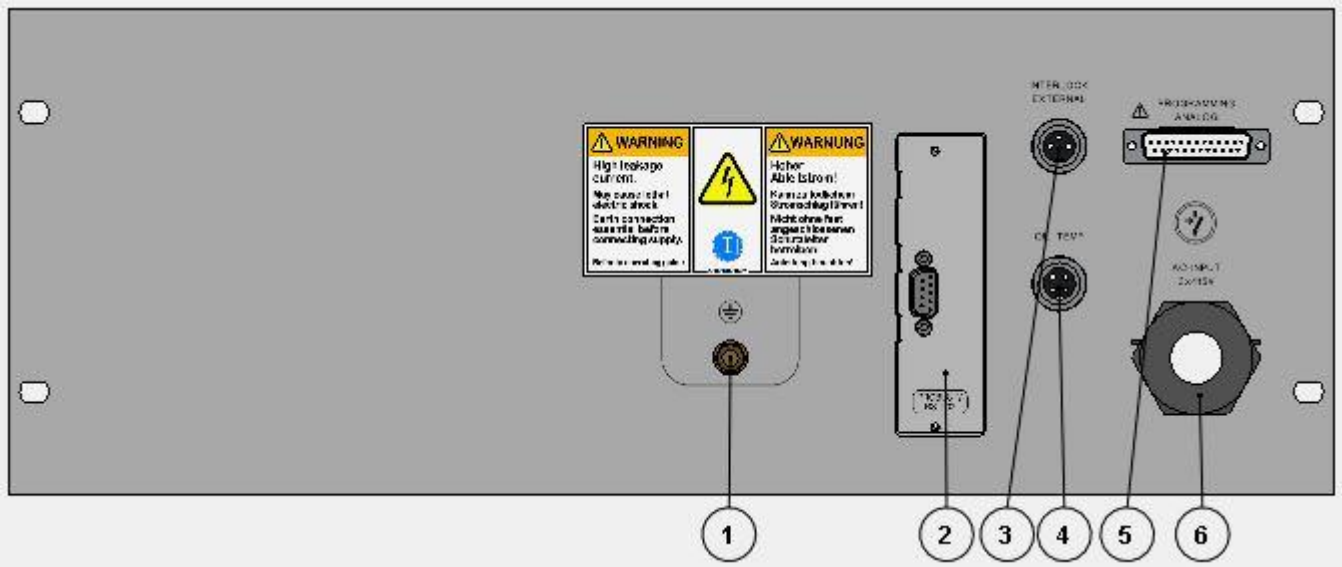


| | |
|---|---|
| 1 | Earth stud, Due to high leakage current PEN connection required! |
| 2 | Digital programming RS 232 |
| 3 | Connection (MINICON 3P) Interlock loop |
| 4 | Connection (MINICON 4P) oil overtemperature |
| 5 | Analog programming (SUB-D 25P) |
| 6 | Mains Input (3 PH 415V ±10%) with fixed 5 phase cable. |

## 3.8 Top view oiltank

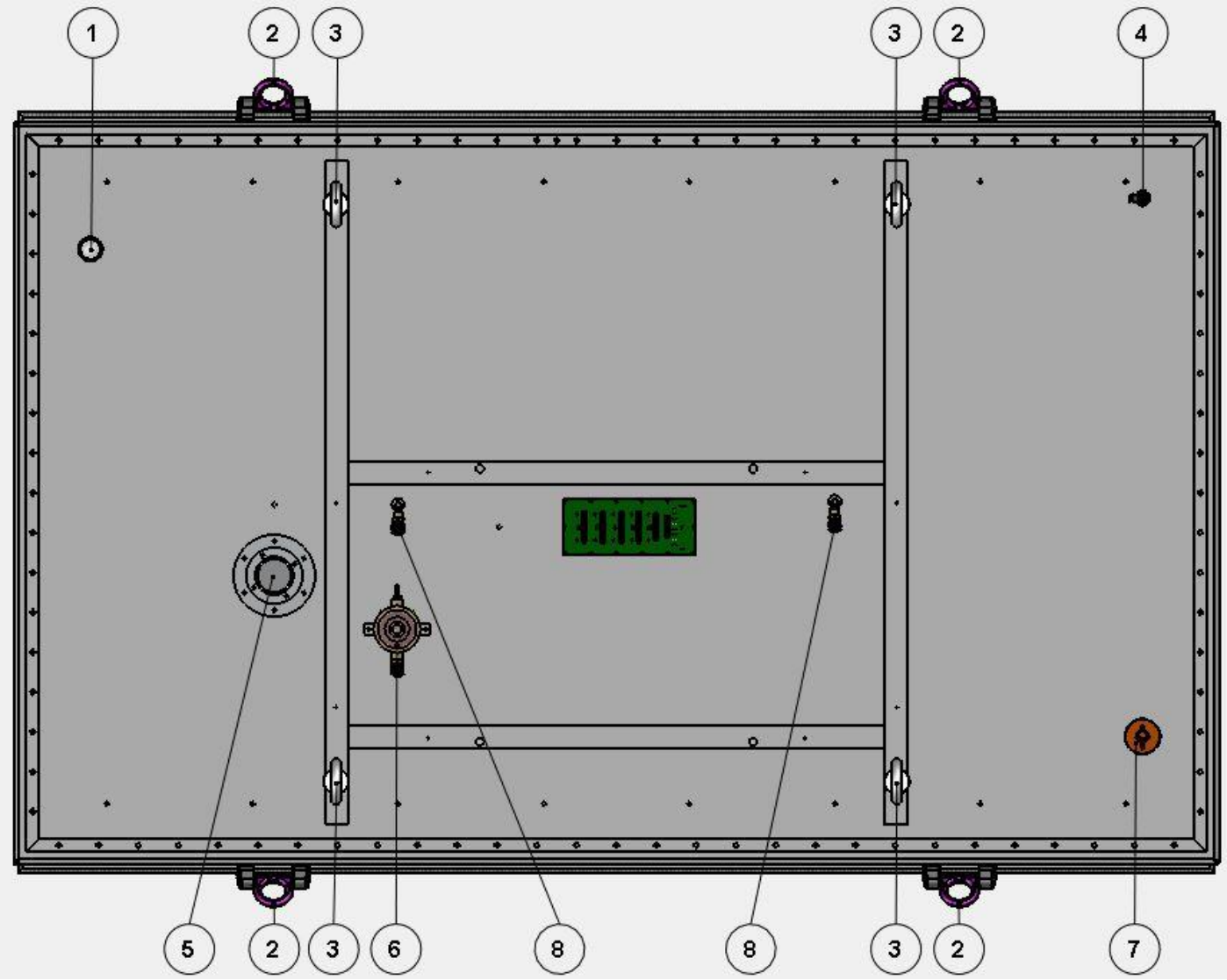


| | |
|---|---|
| 1 | Sight glass - Check periodical the oil level through the Sight glass. The oil should cover the hole sheet. |
| 2 | Housing eyebolt to lift the complete unit (transport) |
| 3 | Housing eyebolt - ONLY to lift the upper part in case of service (access to oil tank) |
| 4 | Sensor oil over temperature |
| 5 | HV-Output |
| 6 | Oil (air) dryer!! Before putting into operate do connect dryer and ventilating hoses (8)!! |
| 7 | Oil tank vent with dipstick –<br>Transport lock! Exchange the black screw cap of the oil container for the orange screw cap. |
| 8 | Connection for ventilating hose |

## 3.9 Assembly

The power supply consists of 5 main units:

1. Mains source and oscillating unit
2. HV-transformer, HV-rectifier with filter, HV-divider and current measuring shunt
3. HV container (Oil tank)
   - The oil container must be placed in horizontal position (±2mm/m).
     The container should stand as free as possible to grant an optimal heat dissipation.
     Check through the glass window on the top whether the pinched metal sheet is covered with oil. Smaller shortages have to be supplemented (SHELL DIALA S4 ZX-IG DRIED).
   - **The show glass for the oil level controlling may only be opened when the unit is switched off.**
4. Control unit with measuring and control amplifier, reference voltage source, pulse width modulator, source for the control unit from the mains transformer and a ±15 V voltage stabilizer.
5. Front panel board with 7-segment display, microcontroller, digital calibration

## 3.10 Mode of operation

The rectified mains voltage feeds the rectangular push-pull oscillator stage. For the regulation, the rectangular voltage is pulse width modulated.

**High voltage**

This rectangular voltage is transformed by a HV-transformer and dependent on type or nominal voltage rectified by a bridge or a multiplier circuit.

**Filtering**

The High Voltage so generated is filtered by a R-C-filter and fed to the output via a protection resistor.

**Voltage measurement**

A precision HV-divider feeds the measured voltage to the control circuit. For a better performance, a voltage derived from a capacitive divider on the end of the rectifier is added.

The divided voltage is normalized by an integrated amplifier to +10V = $V_{nominal}$.

**Voltage control**

The normalized voltage forms the actual value for the voltage control amplifier. The measuring socket and the V-monitor are also supplied from this voltage. The voltage control amplifier compares this voltage with the setting voltage (reference voltage divided by the setting potentiometer or an external programming voltage).

The difference is amplified and fed, as control signal, to the input of the PWM- circuit, which drives the oscillator unit.

**Voltage limitation**

The voltage set value can be limited by a potentiometer on the front panel. The limitation is always active, independent of the operation mode of the power supply.

**Current measurement**

The current in the earthy pole of the HV-rectifier flows through a current measuring resistor.
The voltage drop on this resistor is also normalized by an integrated amplifier, (+10V = nominal current).

**Current control**

The normalized voltage forms the actual value for the current control amplifier. The measuring socket and the V-monitor are also supplied from this voltage. The current control amplifier compares this voltage with the setting voltage (reference voltage divided by the setting potentiometer or an external programming voltage).

**Internal supervision**

The ±15 V source of the control electronics is monitored.
Operation of the control unit is only released if the supply voltages are within their limits.

**Over temperature**

The temperature of the internal power circuits in fan cooled units is monitored. In case of over temperature, the power circuits are electronically switched off and LED TEMP (over temperature) goes on.
Reset after cooling down by switching the unit off and on again.
Possible reasons for over temperature: fan blocked or dusty, ventilation slits blocked

# 4. Operation with local controls

**The unit delivers dangerously High Voltage!**

**Please follow the safety instructions in section 1**

**Please notice in particular Load connection in section 2.2**

**Select local operation**

The power supply is equipped with “Analogue and digital programming”, set switch (5) to LOCAL.

**Save switch on**

Switch on the POWER switch (1). The LED LOCAL (4) is on, indicating local operation. Check the voltage set value (19). Start with zero voltage set value. Push the Button “UNIT ON” (27) and HV ON” (28). The LED “OUTPUT ON” (2) lights up

**Set value Display**

Shortly pressing SETVALUES (22) switches both displays to display the valid set values.
With potentiometers Voltage (19) and Current (25) the needed set values can be adjusted.
The displays begin to flash, indicating the set value display mode and switch back after some seconds to actual value display.
Pressing the SETVALUES button (22) longer than approx. 2 seconds, forces the displays to stay in set value display mode until the key is pressed again.

**Adjustment Range**

The internal potentiometers provide an adjustment range of approx. 0,1% to 100% of their nominal value.

**Adjustment of voltage limit**

Turn the voltage potentiometer clockwise to its limit and switch to set value display. With a screwdriver you can now adjust the maximum voltage on the potentiometer (20). During this, the LED V-LIMIT is on and the limitation voltage is displayed on the left display.
If you wish no voltage limitation, simply turn the potentiometer (20) clockwise to its limit. LED V-LIMIT goes off.
Turn voltage potentiometer back to the desired set value and switch display mode to actual value display (press key SETVALUES (22))

**The voltage limitation is always active. It limits the maximum output voltage also in operating mode “Analogue programming” or “digital programming”.**

**Control mode indication**

Depending on the adjusted set values and connected load, the power supply will run either in constant voltage CV (18) or constant current mode CC (24).

**Save switch off**

The following switch off procedure is recommended:
First, inhibit the output with Button “HV OFF” (29). The LED “ON” (2) goes off.
After the output voltage has reached a low and save value, you can switch off the power supply with switch POWER (1).
This procedure gives you more safety, because the slow ramping down of the output voltage can be monitored on the display.
At immediate switch off with POWER switch, there could be charged capacitors remaining on dangerously high voltage that cannot be recognized, because display turns dark immediately.

# 5. Maintenance

**Isolating oil**

The isolating oil has to be checked all 2000 operating hours, but at least every year. By this check the dielectric strength must be controlled and the oil level. (In cold condition the oil must cover the punched sheet metal).

**Checking the oil level**

- The tank must be in horizontal position (± 2mm/m).
- The oil must be cold (20°C) and cover the punched sheet metal with min 1-5mm
- At a warm oil tank the oil level is higher because of the expansion of the oil. The punched sheet metal must be covered in any case.
- Screw out the cup plug and clean the measuring stick with a not fluffing cloth.
- Put in the cup plug again in and out. The marking (minimum level) on the down end of the stick must be wetted with oil.
- If the oil level is too high or too low, first check the horizontal position of the tank.

**Ventilation grids**

Depending on the pollution the ventilation grids have to be cleaned regular.

# 6. Programming

## 6.1 Analoge programming

| | |
|---|---|
| **Features** | Controlling of Voltage, current and output on/off by the analog interface. |
| | Provides the readout of actual values as analog voltages and latest control modes as digital status signals. |
| **Select analog programming** | Set switch (5) to REMOTE.<br>If the power supply is additionally equipped with option Probus V (digital programming), set also switch (9) to ANALOG.<br>LED ANALOG (7) indicates analog programming selected |
| | Now, the power supply is controlled by the signals on connector (rear panel 9). |
| | Voltage and current are controlled by standard control voltages of 0..10V.<br>0...10V control voltage can be derived from an external potentiometer or some other source, i.e. PLC.<br>Through special connections internal and external control can be combined. See examples below. |
| **Voltage limitaion** | The voltage set value limitation is always active. Adjustable with Potentiometer V-LIMIT (20) on the front panel. |
| **Cable shielding** | Connection cables to the analog programming connector must be shielded.<br>The cable shield must be connected to earth, i.e. to the mounting nuts of the connector. |

**Precision, Linearity, Stability and Temperature Drift**

| | |
|---|---|
| | Due to the direct coupling, there is no degradation of the power supply performance. |
| | The reference voltage (+10V) or the set value voltages can be supplied by some other sources, i.e. PLC or PC plug-in cards (0V must be connected) |
| | The UNIT-ON command (Pins 10 - 6) and the HV-ON command (Pins 17 – 6) **must** be connected implicitly. |
| **ATTENTION!** | **If the unit is switched off or mains fails possibly existing output voltages or currents will not be displayed on the monitor terminals.** |

Versions of analog Programming

| Pin-No. | Name | Type | Function |
|---|---|---|---|
| 1 | I-REG | Digital Output | Supplies approx. +15V if power supply is in constant current mode. Same as LED CC on front panel. |
| 2 | V-REG | Digital Output | Supplies approx. +15V if power supply is in constant voltage mode. Same as LED CV on front panel. |
| 3 | I-MON | Analogue Output | Actual output current monitor signal.<br>0 .. +10V represents 0 .. 50mA<br>Source impedance appr. 10kOhm |
| 4 | VPS | Analogue Output | Slider of voltage potentiometer on front panel<br>0 .. +10V represents 0 .. 300kV<br>Source impedance appr. 10kOhm |
| 5 | IPS | Analogue | Slider of current potentiometer on front panel<br>0 .. +10V represents 0 .. 50mA<br>Source impedance approx. 10kOhm. |
| 6 | 0VD | Digital Ground | Ground for digital signals |
| 7 | NC | not connected | |
| 8 | V-SET | Analogue Input | 0 .. +10V controls 0 .. 300kV<br>Input resistance to 0V approx. 10MOhm. |
| 9 | RESET CMD | Digital input | A connection to Pin 6 (0VD) for RESET<br>Same function as switch RESET on front panel.(on time max. 500ms) |
| 10 | UNIT- ON CMD | Digital input | A connection to Pin 6 (0VD) releases main power<br>Same function as switches UNIT ON/OFF on front panel. |
| 11 | NC | not connected | |
| 12 | NC | not connected | |
| 13 | NC | not connected | |
| 14 | 0V | Analogue Ground | Ground for Analogue signals, must not carry any current |
| 15 | +10VREF | Analogue Output | +10V precise reference voltage, max. load 3mA |
| 16 | V-MON | Analogue Output | Actual output voltage monitor signal.<br>0 .. +10V represents 0 .. 300kV<br>Source impedance approx. 10kOhm. |
| 17 | HV-ON CMD | Digital input | A connection to Pin 6 (0VD) releases the output voltage<br>Same function as switches HV ON/OFF on front panel. |
| 18 | NC | not connected | |
| 19 | NC | not connected | |
| 20 | I-SET | Analogue Input | 0 .. +10V controls 0 ..50mA<br>Input Resistance to 0V approx.. 10MOhm |
| 21 | NC | not connected | |
| 22 | | | |
| 23 | | | |
| 24 | | | |
| 25 | | | |

## 6.2 Digital Interface PROBUS V RS 232

The flexible Interface System Probus V consists of two parts, that communicate over a fiber optic connection.

- Unit ADDAT30 (short “ADDA”) is an AD/DA interface that controls the power supply. ADDA is connected to an interface converter via fiber optics. ADDA is located as a plug on module on the power supply electronics. It is accessible after opening the left side panel of the housing.
- The interface converter that connects ADDA to different bus-systems, is located at the back panel of the power supply.
  It can also be operated outside the power supply. In that case, the outside connection is fiber optic and therefore, a maximum of EMC ruggedness can be achieved.

**Features (short form)**

“Probus V” provides commands to set output voltage, output current and to switch the output voltage.
Set values can be ramped with defined speed.
High resolution read back of actual values.

**Programming speed**

Up to 2000 set values per second possible.

**Select Digital Interface**

Set switch (5) to REMOTE.
If the power supply is additionally equipped with an “analog programming” option, set also switch (9) to DIGITAL.
LED DIGITAL (8) indicates digital programming selected

**Status indication**

LED BUSY (6) flashes on data traffic.

**Voltage limitaion**

The voltage set value limitation is always active. Adjustable with Potentiometer V-LIMIT (20) on the front panel.

**Further Information**

A detailed description of the Probus V system (command set, driver installation etc.) is provided in separate manuals that come along with Probus V.

# 7. Technical Data

**All here stated data are valid for voltage and current control in internal operation.**

For changes of the technical data with the options Analogue and digital programming see corresponding sections.

| | | |
|---|---|---|
| **AC - Input** | 415V ±10% / 3 phase / 50Hz ±2Hz. Overvoltage category II according to IEC664.<br>N-connection and PE (non fused earth) always necessary!<br>For devices with high leakage current required PEN | |
| **EMC Standards** | See Certificate of Conformity. | |
| **Safety** | See Certificate of Conformity. | |
| **Environment Conditions** | **Operating room:** | Only for indoor usage (see section 2.1.) |
| | **Temperature:** | 0 °C to 40 °C |
| | **Air humidity:** | Max. relative humidity 80% until 31 ºC,<br>linear decreasing until 50% relative humidity at 40 ºC |
| | **Atm press:** | Altitude max. 2000 m over sea level |
| | **Contamination:** | 1 |
| **Protection Class** | IP20 | |
| **Output Voltage / Current** | **300kV/ 50mA**. | |
| **Output Polarity** | positive | |
| **Setting Range Voltage**<br>**Current** | With Potentiometer **VOLTAGE** appr. 0,1% to 100% from nominal value<br>With Potentiometer **CURRENT** appr. 0,1% to 100% from nominal value | |
| **Reproducibility** | $\pm 1x10^{-3}$ from nominal value, with potentiometer on the Front panel | |
| **Setting Resolution** | With potentiometer on the front panel $1x10^{-4}$ from nominal value | |
| **Residual Ripple** | $5x10^{-4}$ pp (0,05%pp) from nominal value (150Vpp) / (0 – 10MHZ) | |
| **Deviation** | $<\pm 1x10^{-4}$ from nominal value, for ±10% mains voltage variation<br>$<5x10^{-4}$ from nominal value, for 0 to 100% load variation<br>$<\pm 5x10^{-4}$ (<±0,05%) from nominal value, over 8 hours, for voltage regulation<br>$<\pm 5x10^{-4}$/K (<±0,05%/K) from nominal value at temperature variation, for voltage regulation | |
| **Setting range** | For voltage: 3kV to 300kV<br>For current: 5mA to 50mA | |
| **Voltage control (recovery time)** | <100ms for load changes from 5mA to 45mA or 45mA to 5mA (10% to 90% and vice versa – voltage in voltage control mode is constant) | |
| **Current control (recovery time)** | <100ms for load changes causing an output changes of less than 10% (less 30kV) of the rated voltage (current is current control mode is constant) | |
| **SLEWRATE**<br>**(**Function switchable) | Slewrate 0 … 300kV = 120 seconds, 300kV to 0 = 120 seconds | |
| **Setting time at nominal load** | <1 sec for changes of the output voltage from 30kV to 270kV or from 270kV to 30kV to within ±0,05% of set value | |
| **Discharging Time Constant** | at unloaded output max. 10 sec | |
| **Voltage Display** | DVM (4 ½ digit) for voltage (300.0kV) | |
| **Current Display** | DVM (4 ½ digit) for current (50.00mA) | |
| **Status Display** | LEDs for constant voltage, constant current, set value limitation active, setting of programming switch, Output ON, polarity, overtemperature | |
| **Weight:** | **Approx. 4900kg** | |
| **Oil quantity:** | **Approx. 3745l** | |

# 8. Calibration (Option)

**Calibration Certificate**

All guaranteed data for our power supplies are tested in the factory and documented in an internal test protocol.

On request we can offer optionally a calibration in our plant. In this case the customer receives a calibration certificate due to our ISO 9001 : 2008 certified quality system. We confirm the compliance of the output data with our catalog data. A blue calibration sticker than refers to the last recommended calibration date.

**Subsequent Calibration**

Generally we recommend an annual subsequent calibration.

# 9. Certificate of Conformity

The power supplies carry the CE-sign. Please read the Certificate of Conformity.

# 10. Accessories

**Connectors, Cables**
**Mounting instructions**

**See enclosed Mounting Instructions**

## 10.1 Cable, plug

1x 10m HV-Cable (C2236) with HV-Connector 300kV (open end customer side)

1x Cable connector minicon 3P (for interlock)

1x Cable connector SUB-D 25P (analogue programming)

# 11. Warranty, Repairs

Your power supply has been assembled and tested under stringent quality assurance procedures.

**We provide a 2 years warranty, commencing with the delivery date stated in the serial number.**

This warranty does not cover misuse or attempted repair by untrained personnel.
Enclosed you will find one set of circuit diagrams for service purposes.
In all further enquiries for service or spare parts, please provide both the model and serial number of the unit