PANTECHNIK
13 rue de la Résistance 14400 Bayeux France
Tel: +33 231 51 27 60 Fax: +33 231 21 96 33

# 1D_FARADAY_V05 DATASHEET

# CONTENT

1. DATASHEET....3

2. General Description....4

3. Connections....7

3.1. Beam current and biased disk....7
3.2. Position switches....8
3.3. Air connection....8
3.4. Water connection....9

4. THERMAL Simulation....10

5. Technical Documentation....11

# 1. DATASHEET

| | | |
|---|---|---|
| **FARADAY CUP HEAD** | | |
| Faraday Cup material | | CuA1 + 316L |
| Stopper conical shape | | Graphite |
| Electron suppressor | Bias-able disk | Yes up to - 1000 V<br>SHV Connector |
| | Permanent magnet | Yes (NeFeB) |
| **BEAM FEATURE** | | |
| Ion type | Positive – Negative –<br>Mono to Multi-charged | Any of Mendeleev table |
| Beam intensity (mA) | DC | 100 mA |
| Beam Power (W) | DC | 3 kW |
| | Pulsed (20Hz - 5ms) | 10kW peak |
| | Max power density 1RMS | 10 kW/cm² |
| Beam size | Min diam. For 1 **σ** | 5 mm |
| | Max diam. Full beam | 30 mm |
| **MEASUREMENT** | | |
| Beam Current | In the FC | Reading via UHV BNC feedthrough on flange |
| | On the collimator | NA - grounded |
| Biased current | Electron suppressor | Via the HV PS (not provided) |
| **MECHANICAL** | | |
| Actuator - stroke | Type | Pneumatic cylinder + CF100 High Vacuum below |
| | Stroke | 100 mm |
| | Air Pressure | 10 Bars max. |
| | Connector | For 6mm OD plastic tube |
| External protection | | PMMA transparent cover |
| Total Weight | | 14,3 Kg |
| **ELECTRICAL** | | |
| Actuator | Solenoid | 24V DC, 1 watt |
| | Micro-switch | 3 wires |
| **Cooling** | | |
| Circuit | Silver Brazed tube | Copper tubes OD 6mm |
| Liquid | De-ionized water | Conductivity<br><1µsiemens / cm |
| flow | 5 $l.min^{-1}$ | @20°C |
| Temperature | ▲T 2°C max (régulation) | Min:15°C Max :24°C |
| **Vacuum** | | |
| Flange | | CF100 |
| Max. Leak rate | | < $1.10^{-9}$ $mb.l.s^{-1}$ |

## 2. GENERAL DESCRIPTION

This equipment has been designed for the measurement uo to 3 kilo-watts ion beam.

- Before entering the copper block, the beam is going through a grounded disk and a biasable disk.
- The biased disk is for the secondary electron suppression. This can be used with a DC voltage power supply depending of the feature of the measured beam (max 750V negative).
- The copper block is equiped with two permanent magnets which create a magnetic field that acts as secondary electron suppressor. This is sufficient in most of the measured beam. If needed the effect can be improved by applying a DC bias voltage on the biased disk.
- The copper block is also equiped with a water cooling circuit which allows a higher power beam up to 3kWatts.
- The linear motion is sealed using a stainless steel high vacuum bellow.
- Only metal gaskets on CF 100 flanges are used for an optimum vacuum.
- The Faraday cup and its Actuator are fully removable for a simple maintenance and parts replacement,

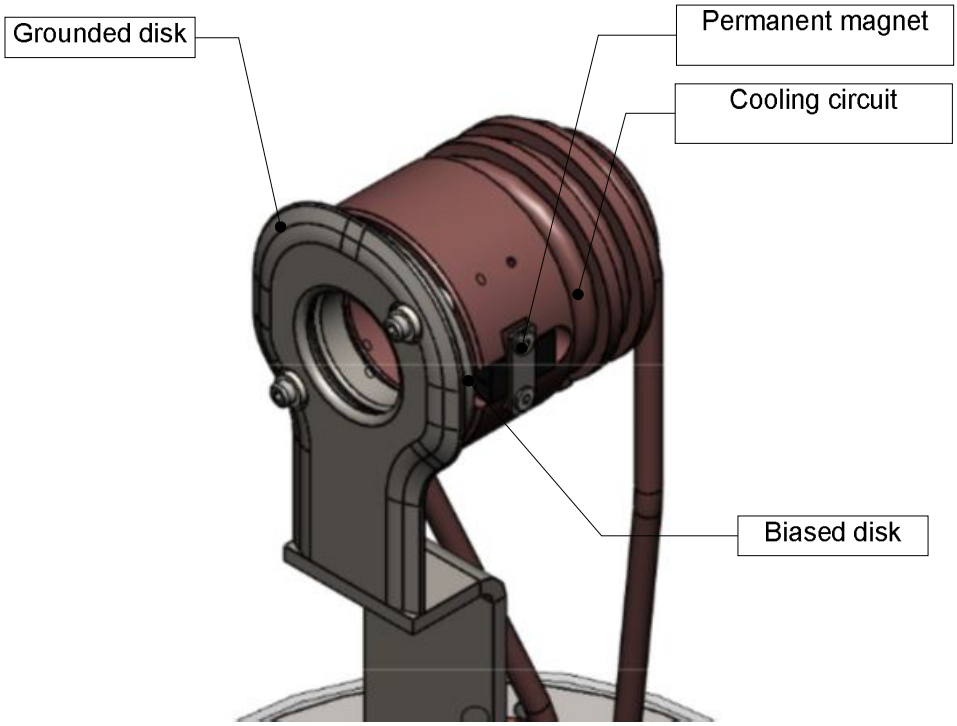


*Illustration 1: Faraday Cup description*

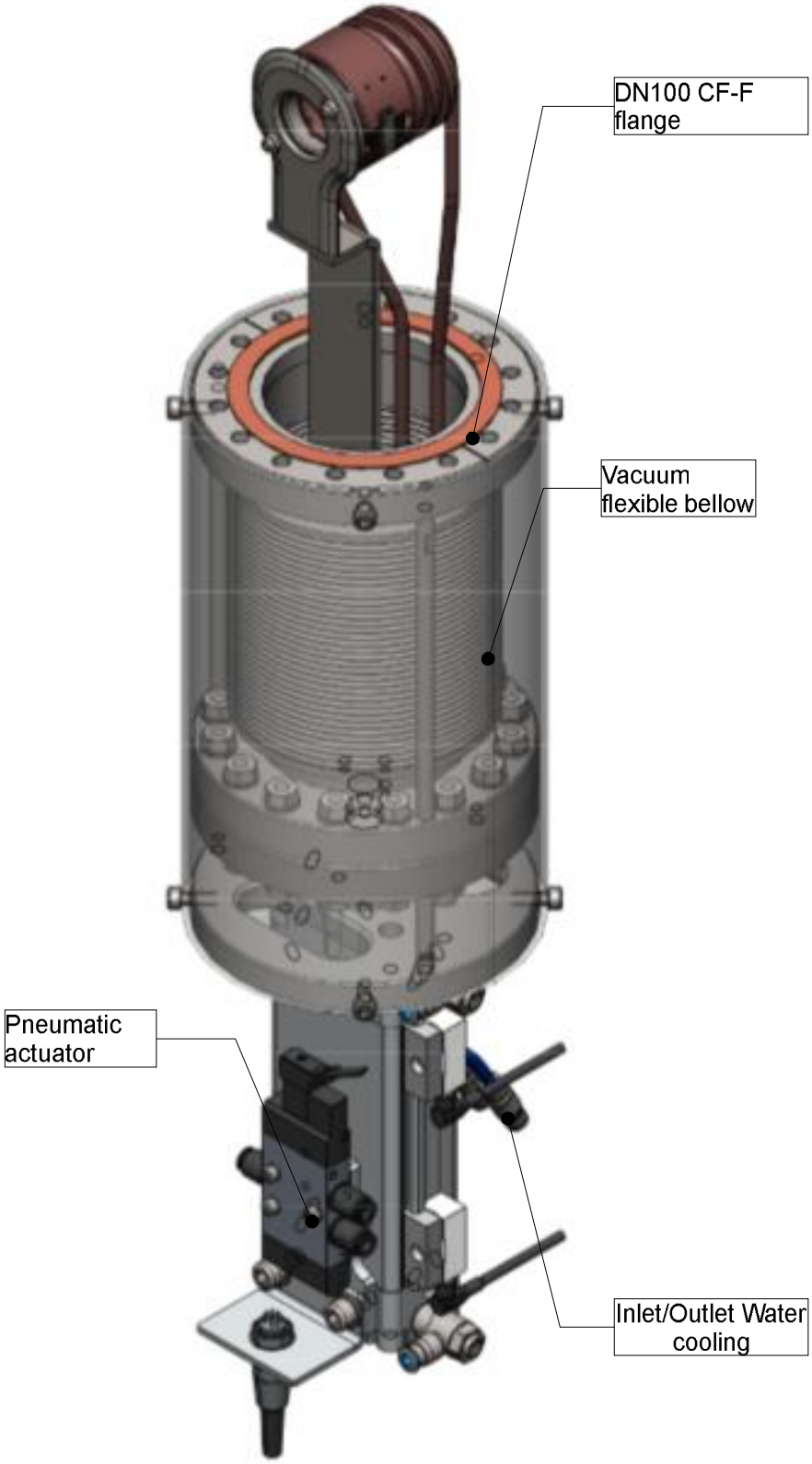


*Illustration 2: Faraday cup and actuator*

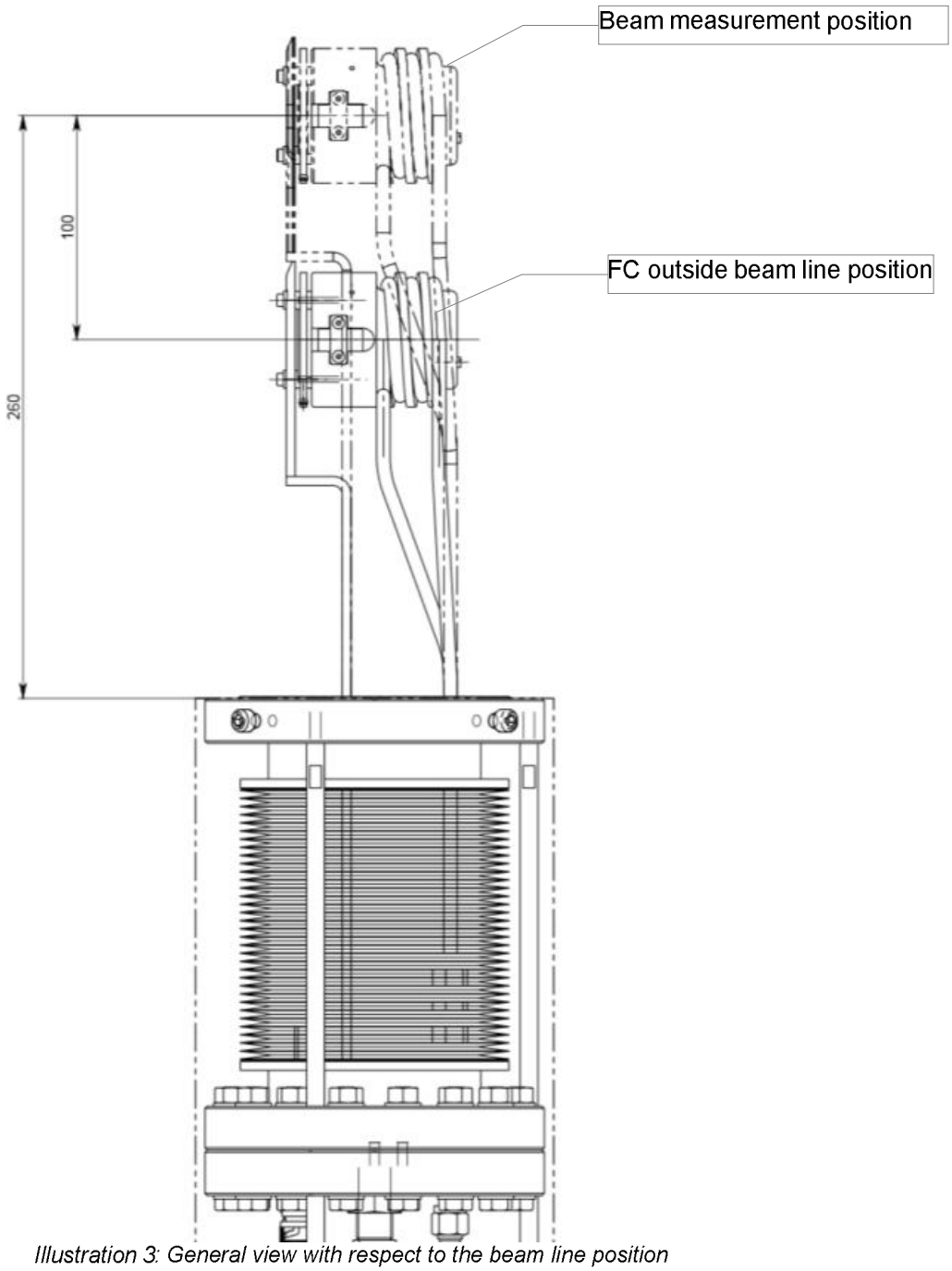


*Illustration 3: General view with respect to the beam line position*