## BENCH WITH PROTECTIVE CAGE CLOSED

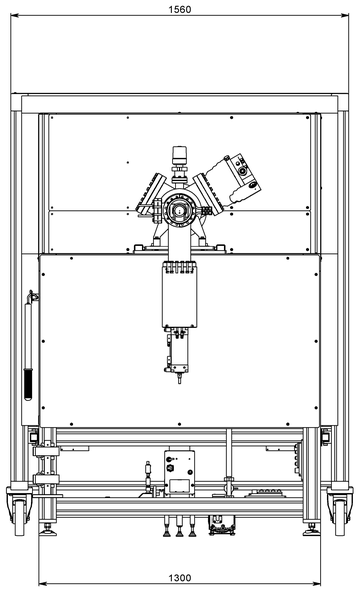


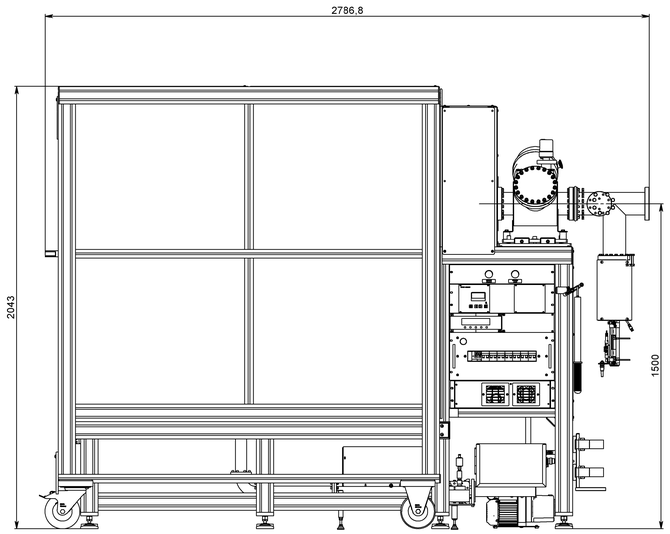


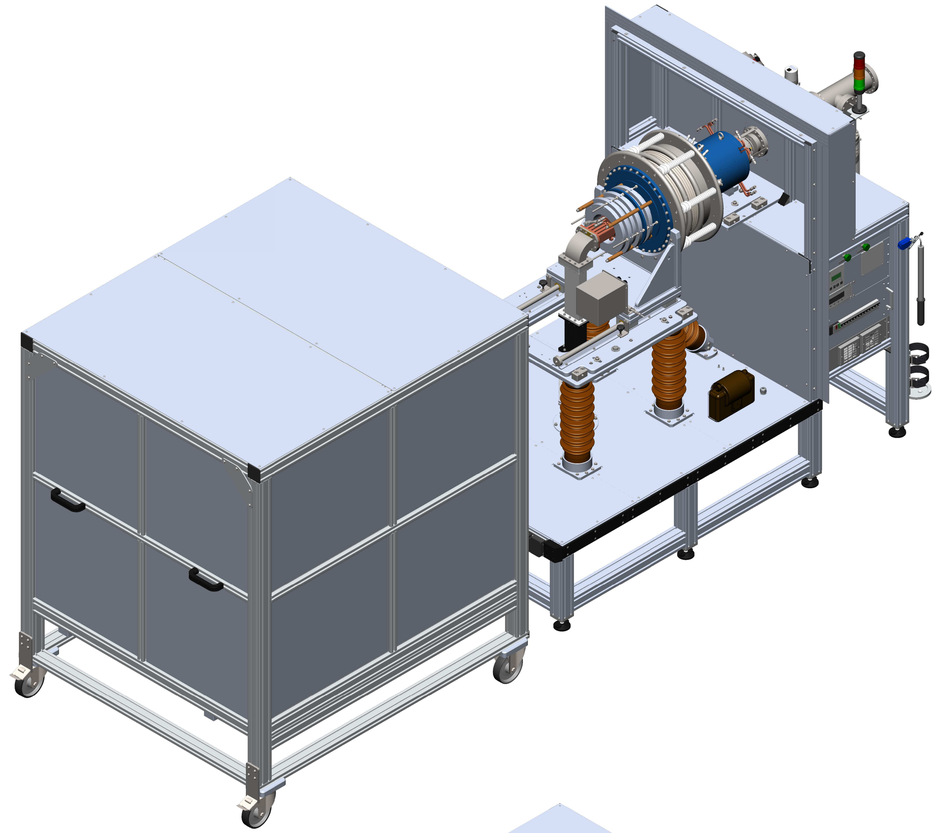

## BENCH WITH PROTECTIVE CAGE OPENED

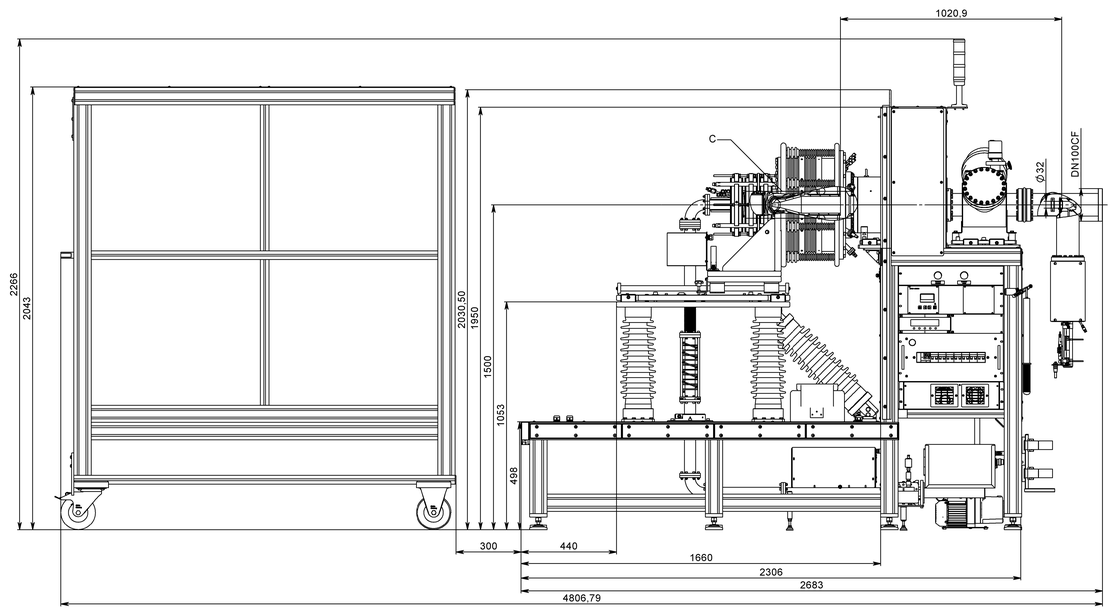


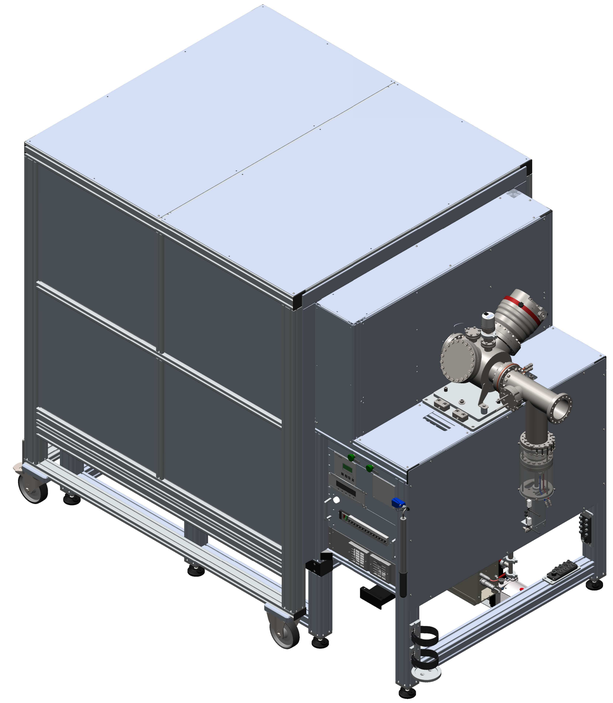

| | | | |
|---|---|---|---|
| 0 | | | |
| MATERIAL: | TREATMENT: | | Break sharp edges |
| FINISHING: | GEN. TOL. : | Approx. mass (g.) : 1484035 | |

PANTECHNIK
13 rue de la Résistance
14400 BAYEUX
FRANCE
Tel. +33 (0) 231 51 01 780
Fax. +33 (0) 231 219 633
www.pantechnik.com

MANUAL MODIFICATION FORBIDDEN

**IPR source bench**

SCA. 1:10

A0

SHEET 1 / 2

PK3201_001_00

QUALITY CONTROL APPROVED

WRITEN APPROVAL

THE 03/05/15

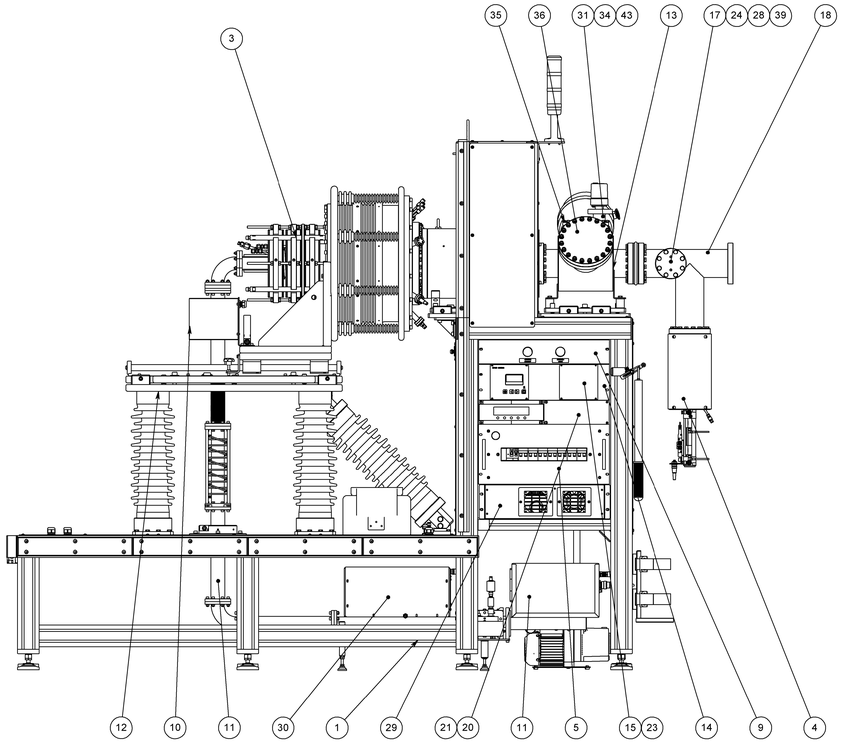


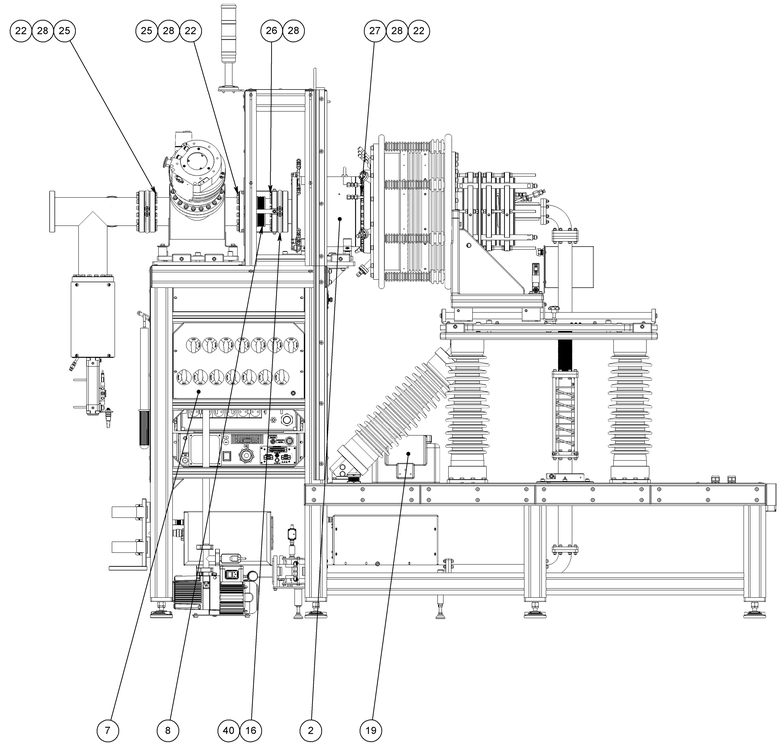


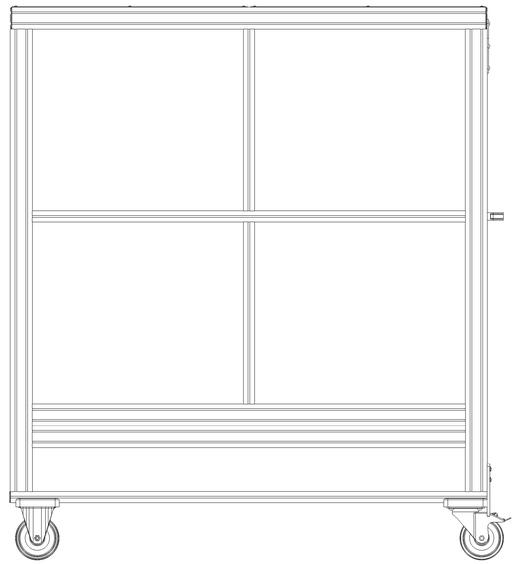

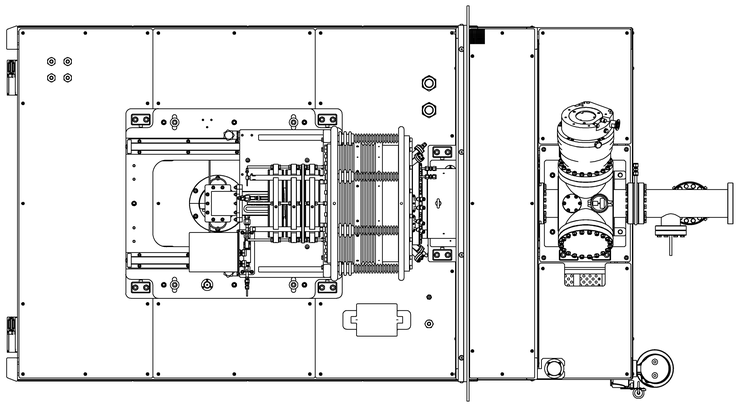

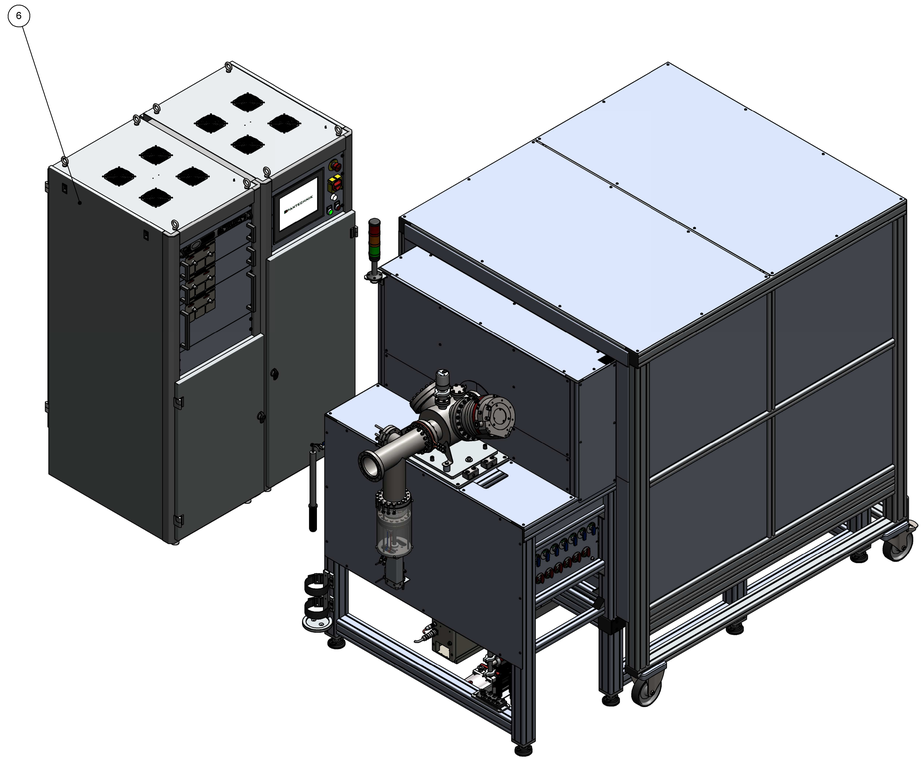


| No. ARTICLE | PART NUMBER | DESCRIPTION | QTY | PANTECHNIK SUPPLY |
|---|---|---|---|---|
| 1 | 0B_SOURCE_V02 | Source bench with cage for SILHI | 1 | X |
| 2 | 0O_SOLENOID_V01 | Solenoid Ø80 | 1 | X |
| 3 | 0S_SILHI_V01 | SILHI assembly | 1 | X |
| 4 | 1D_FARADAY_V05 | Faraday Cup Ø32 cooled on propeller | 1 | X |
| 5 | 1E_C&C-RACK_V01 | C&C Rack 5U | 1 | X |
| 6 | 1E_C&C_V04 | Command and control cabinet | 1 | X |
| 7 | 1F_WATERPANO_V03 | Water cooling distribution panel | 1 | X |
| 8 | 1L_BELLOWS_V03 | Edge welded bellows DN100CF | 1 | X |
| 9 | 1N_GASHP_V04 | Gas panel for 1 gas 2U | 1 | X |
| 10 | 1N_GASLP_V03 | Gas injection for Hydrogen | 1 | X |
| 11 | 1R_RFSYSTEM_V03 | RF Line WR340 | 1 | X |
| 12 | 1S_TROLLEY_V06 | Trolley for Silhi | 1 | X |
| 13 | 1V_PUMPTANK_V02 | Pumping tank with adjusting plate | 1 | X |
| 14 | 2E_U-RACK-DRI_19 | Front panel 3U for TCP350 x2 | 1 | X |
| 15 | 2M_COVER_22 | Cover plate for TCP | 1 | X |
| 16 | 2M_DIAPHRAGM_01 | Diaphragm flange DN100CF and Ø60 | 2 | X |
| 17 | 2M_DIAPHRAGM_02 | Diaphragm Ø35 on DN63 CF | 1 | X |
| 18 | 2M_TANK_12 | Vacuum tank for Faraday cup | 1 | X |
| 19 | 3E_TRANSFORM_02 | High voltage transformer 240V 40kV - Transfo Industrie - TMI-40kV-108VA | 1 | X |
| 20 | 3E_U-19P-ACC_18 | Blank panel 2U 1/2 rack width - Pfeiffer - PT 441 481 | 1 | X |
| 21 | 3E_U-19P-ACC_19 | Connection piece for 1/2 blank panel with screws - Pfeiffer - PT441480-T | 1 | X |
| 22 | 3H_NUTH8_01 | Nut H M8 - S.S. A4 | 80 | X |
| 23 | 3H_SBSH3x10_01 | Button head socket screw M3x10 - S.S. A4 | 8 | X |
| 24 | 3H_SHH8x35_01 | Hexagonal Head Bolt M8x35 - S.S.A4 | 8 | X |
| 25 | 3H_SHH8x50_01 | Hexagonal Head Bolt M8x50 - S.S.A4 | 48 | X |
| 26 | 3H_SHH8x55_01 | Hexagonal Head Bolt M8x55 - S.S.A4 | 16 | X |
| 27 | 3H_STUD8X35_01 | Stud M8x35 - S.S.A2 | 32 | X |
| 28 | 3H_WZ8_01 | Washer z serie 8 - S.S. A4 | 152 | X |
| 29 | 3R_RFAMPLI_02 | Microwave generator 2450 MHz - 1200W - Sairem - GMP 12K SM 56M230 FST 1 IR | 1 | X |
| 30 | 3R_STUBAUTO_01 | Automatic impedance adapter 4 stubs - Sairem - AI4SAWR340D16X20MRR1PEN 1.00 UM24V | 1 | X |
| 31 | 3V_ADAPTVAC_13 | Adapter DN40CF to DN40 ISO-KF - Trinos - 420RUG040-040-50 | 1 | X |
| 32 | 3V_CLP16_01 | Clamp DN16 ISO-KF | 1 | X |
| 33 | 3V_CLP25_01 | Clamp DN25 ISO-KF | 6 | X |
| 34 | 3V_CLP40_01 | Clamping ring DN40 ISO KF - Aluminium | 1 | X |
| 35 | 3V_FCFFH40_01 | Flange DN40CF - Fixed - Blank - 304L | 1 | X |
| 36 | 3V_FCFFH160_01 | Flange DN160CF - Fixed - Blank - 316L | 1 | X |
| 37 | 3V_HOSEKF25_04 | Metallic hose standard DN25 ISO-KF | 2 | X |
| 38 | 3V_RTKF2516_01 | Reduction Tee DN25 ISO-KF--DN16 ISO-KF | 1 | X |
| 39 | 3V_SEALCF63_01 | Copper seal CF63 | 1 | X |
| 40 | 3V_SEALCF100_01 | Copper seal CF100 | 1 | X |
| 41 | 3V_SEALKF16_01 | Seal DN16 ISO-KF | 1 | X |
| 42 | 3V_SEALKF25_01 | Seal DN25 ISO-KF | 6 | X |
| 43 | 3V_SEALKF40_01 | Centering ring DN40 ISO-KF - FPM-SS | 1 | X |
| 44 | 3V_VALVEKF_03 | Manual angle valve DN25 Iso-KF | 1 | X |

03/05/15

| | | | |
|---|---|---|---|
| 0 | | | |
| MATERIAL: | TREATMENT: | | Break sharp edges |
| FINISHING: | GEN. TOL. : | Approx. mass (g.) : 1484035 | |

PANTECHNIK
13 rue Jacques Lancelot
14420 BAYEUX
FRANCE
Tél. +33 (0) 231 510 760
Fax. +33 (0) 231 219 633
www.pantechnik.com

MANUAL MODIFICATION FORBIDDEN

**IPR source bench**

SCA. 1:10

A0

PK3201_001_00

SHEET 2 / 2

THIS DOCUMENT IS PROPERTY OF PANTECHNIK EXCLUSIVELY AND CANT BE COMMUNICATED WITHOUT WRITTEN APPROVAL